GEOLOGIE EN MIJNBOUW© 1980 VOLUME 59 (3), p. 193-213

GEOHYDROLOGY AND GEOTECHNICAL ASPECTS OF DEWATERING OF OPEN TAR SAND MINES ALONG THE ATHABASCA RIVER (CANADA)[1]

H. RYCKBORST[2]

ABSTRACT

Ryckborst, H. 1980 Geohydrology and geotechnical aspects of dewatering of open tar sand mines along the Athabasca River (Canada) – Geol. Mijnbouw 59: 193-213.

About 5% of the giant tar sand deposits along the Athabasca River in Western Canada can presently be mined by open-pit mining methods. Under certain conditions, groundwater depressions are created by continuous pumping to keep the tar sand mines dry. Groundwater depressions for plateau-type mines are expected to expand beyond an area of 150 km^2 after ten years. The volumes of groundwater flowing into a plateau-type open mine may range from 17,000-400,000 m^3/day, depending on type of mining methods and the presence of water-tight clays.

The Cretaceous tar sands are separated from underlying rock salt by a karstified Devonian limestone. Some of the groundwater flowing into an open mine consists therefore of saline waters and brines. Modern, but as yet unproven dredging methods may offer an economic alternative to 'dry' open-pit mining methods.

INTRODUCTION

In the tar sands area (Fig. 1) in the province of Alberta, Western Canada, giant tar sands deposits occur in almost horizontal layers close to the surface, such that open-pit mining is presently feasible for 5% or 5.6 x 10^9 m^3 of the total oil-in-place. However, the open-pit mines must be kept dry permanently. Continuous pumping of water from open tar sands mine excavations, which would otherwise be flooded mainly by groundwater, changes the hydrologic equilibrium in the surrounding areas with respect to the equilibrium that existed before mining commenced. Hydrologic equilibrium represents a balance between rain, snowmelt and runoff plus natural water losses. The natural water losses occur through evapo-transpiration by trees and plants and through bottom seepage into creeks, rivers, lakes and springs. The equilibrium is a dynamic equilibrium, since losses are buffered by cyclic changes in the amounts of water stored in solid snowpacks, lakes and swamps.

Excavation of Athabasca tar sand mines changes the entire dynamic equilibrium of the groundwater over large areas surrounding the mines for a period of a decade or longer. Without adequate dewatering systems, groundwater, rain and snowmelt would flood the pit floors, with the exception of those pits where gravity drainage can take place via ditches because the pit floor is located above the level of an adjoining lake, creek or river. Another exception would be encountered in excavations whose floors are partly located above the regional groundwater table, so that the water infiltrates naturally away from the open pit.

Open tar sand mines are equipped with standard dewatering systems, which disperse the mine groundwaters into existing or man-made rivers, lakes or creeks. In some instances, channels conveying pumped mine water have been emplaced in permeable overburden, sands or dunes, into which most of the water infiltrates. It is then indirectly disposed as groundwater seepage towards existing swamps, creeks and rivers. Occasionally, open-pit dewatering is supplemented by a network of low capacity and small diameter groundwater depressurization wells. Those vertical wells withdraw saline or brackish groundwater via submerged pumps whereupon disposal of saline and brackish water takes place again via pipelines, pumps and ditches into natural, or manmade rivers,

---

[1] Manuscript received: 1979-12-17.
Revised manuscript received and accepted: 1980-05-14.

[2] Petro-Canada, Transportation Operations, 2423, 10th Street S.W., CALGARY T2T-3G7, Alberta, Canada.

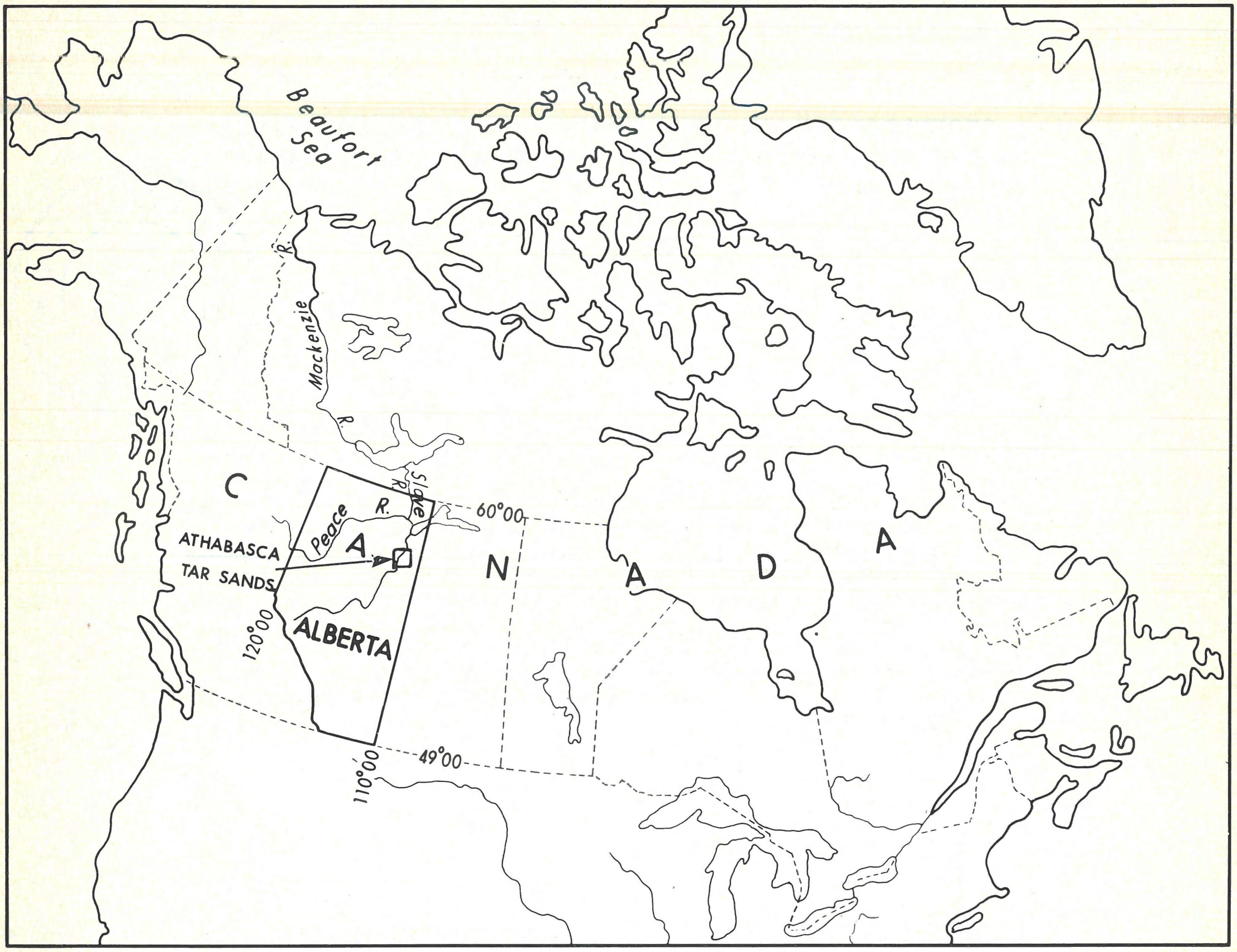

Fig. 1
Location of the tar sands area in N.E. Alberta, Western Canada.

lakes or creeks. In some of the larger, 300 m deep open-pit mines in the world, use is made of 1650 mm diameter groundwater wells, which are equipped with large capacity submersible pumps. These wells are used to drain groundwater out of the bottom and walls of the excavations (BLANK, 1979). Such systems have as yet not been applied to the less permeable, much shallower, but extensive Athabasca tar sand mines. No attempt has been made to use horizontal drains.

Purpose

This paper describes the hydrogeological and geotechnical implications of dewatering of a typical open-pit mine which provides the tar sands for a 16,000 m^3 per day upgrading plant in the Athabasca area. The purpose is to provide the methods to compute the expansion of a groundwater depression induced by dewatering of a surface mine, initially 4 km long, 0.2 km wide and 60 m deep, as it develops into a pit of 4 km long, 5 km wide and 60 m deep over a 25-year life of the mine. Bank instability associated with tar sands dewatering and the breakthrough of saline waters from underlying salt deposits constitute the other topics of discussion.

LITERATURE REVIEW

Literature on large-scale groundwater withdrawal, without artificial recharge, is not especially abundant, but reports by THEIS (1965), SCHNEIDER & THIELE (1965), VOGWILL (1976) and BLANK (1979) discuss extensive groundwater pumping for the purposes of irrigation and mining. In the cases of open-pit mining, the drainage of groundwater is considered to represent a costly problem, without appreciable benefits. In the case of irrigation, the drainage of groundwater is considered a depleting benefit for the area. In each instance, the groundwater is being mined because it is taken from underground storage at a higher rate than it is being recharged from surface. It typically may take from 10 to 3000 years (THEIS, 1965) to 'restore' an old situation to where it was before groundwater withdrawals started. Some of the main conclusions derived from the quoted literature are:

(1) The drawdown effect of extensive groundwater pumping persists long after groundwater 'mining' has stopped and long after the pumps have ceased to operate. For periods ranging from ten to thousands of years, groundwater levels in the cones of depression are still adjusting until a new equilibrium is encountered. The adjustment of water levels occurs throughout an entire set of geologic formations. Adjustment stops when the 'mined' groundwater storage has been replenished. This occurs when the total groundwater recharge in a mining area creates once again a mass balance with the total natural groundwater discharge, as was the case before the mining and pumping commenced.

(2) In most documented cases, pumping has induced diffusion and a convective movement and displacement of fresh water. Through the processes of diffusion and convection, fresh groundwater is replaced with less desirable brackish water, saline water and warm brines.

(3) In the examples from Texas, New Mexico and Germany, springs have dried up, streamflow has been reduced, and some existing public and industrial groundwater supplies dried out and had to be replaced. The strong interconnection between streamflow and groundwaterflow, although not yet recognized in many nations, is legal doctrine in the southwestern U.S.A. For example, when the State Engineer gives out permits for new wells on new lands, equivalent surface-water rights on the river must be purchased and retired (THEIS, 1965).

(4) The shapes of the cones of depression are not circular, but rather elliptical or elongated, as determined by the geological boundaries, the anisotropic permeability of the water-bearing layers and by the depth of pumping. In all parts of the cone of depression, subsidence of ground level occurs; land subsidence is most prominent near the centre of a cone of depression.

(5) The rate of lowering of the groundwater table is approximately proportional to the inverse of the square root of time, which indicates that a diffusion process is in operation.

(6) In the documented cases, records show that after 10 years of pumping, the minimum axis of an elliptically shaped cone of depression in the groundwater surface extends at least 10 km from the center. The cones of depression cover at least 150-1000 km^2, equivalent to an area many times the ultimate size of the open pits or many times the size of the irrigation fields supplied by water withdrawn from underlying groundwater aquifers. For example, in the case of the West German lignite mines, the area below which the groundwater table has been lowered, after 20 years dewatering, comprises 2130 km^2. Some 850 wells, several of which reach depths of 500 m, have withdrawn 2.5 x 10^{10} m^3 of water (BLANK, 1979). Groundwaters discharged out of the lignite mines feed a genuine river of about 40 m^{3}s^{-1}, which contributes 1-2% to the total Rhine River runoff.

GROUNDWATER FLOW PARAMETERS FOR OPEN TAR SAND MINES

Tar sands are heterogeneous, which implies that groundwater drains faster out of the more permeable portions of the tar sands into an excavation than out of the less permeable portions. Each permeable tar sand layer develops its particular 'cone' of depression, thereby draining the less permeable tar sand layers. As the individual groundwater depressions expand, they merge with neighbouring depressions. After about a year, the expansion of the individual cones lead to large depressions to surround an entire oil sands mine. The time required for the development of a groundwater depression is controlled by the physical and geometrical properties of the overburden and the water bearing tar sands, unconformibly underlain by karstified Devonian limestone and rock salt, as well as by the geometry and dewatering techniques applied to an open mining trench. Specifically, the more important controlling factors are:

(1) The hydraulic conductivity (K) of each geological formation expressed in metres per day.
(2) The thickness (D) of each geological formation, expressed in metres.
(3) The amount of water released from storage, determined mostly by a coefficient of storage (μ). The dimensionless storage coefficient ($0<\mu<1$) is defined as the amount of water released from storage per unit drop of the hydraulic head in the geological formations.
(4) An increased vertical recharge P as a result of the forced drainage of muskeg and overburden on the tar sands. This amount of water would otherwise have evaporated. The recharge P increases also due to induced infiltration of waters out of lakes, rivers and springs, which can dry up or experience reduced flow. This water could otherwise have run off through creeks and rivers, but it is now recharged to the groundwater flowing towards the open mining trench.
(5) The depth of a pit determines the potential hydraulic head difference, for as long as a pit is not flooded. The length of the trench establishes the size of the cross section through which the water can flow horizontally towards the excavation. The depth and width of the pit and permeability of basal tar sands and limestone control the radial flow of water from salt deposits and limestone across the bottom into the excavation.
(6) The expansion of the groundwater depression controls the size of the area from which vertical recharge out of the overburden contributes to the groundwater flow via the tar sands into an excavation. The vertical recharge is also deter-

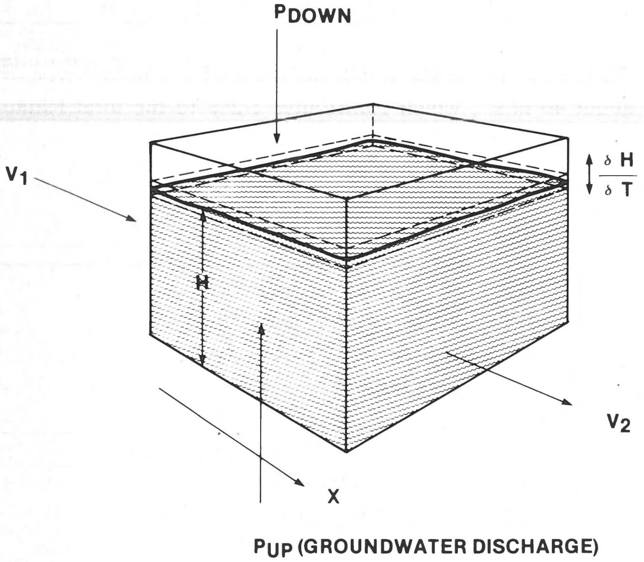

Fig. 2
Definition sketch for transient flow of groundwater.

mined by the vertical permeability and the increasing pressure differential between overburden and tar sands.

THEORY AND METHODS

The theory, which has been used for the numerical computation of the groundwater drawdown around a mine and to estimate the total expansion of the groundwater depression cone through the oil sands away from the mine excavation, is based on the analogy of heat flow and groundwater flow.

Assume a unit volume (Fig. 2) of a geologic formation, with groundwater flowing horizontally from the left to right. If the velocity V_1 equals the velocity V_2, the flow is classified as steady flow.

When the water level in the cube does not rise or fall and no losses or gains occur, then the deceleration or acceleration $\delta^2H/\delta X^2$ of the water within the unit volume equals zero. As the water level H within the cube remains constant over time, $\delta H/\delta t=0$.

When the velocities V_1 and V_2 are different, the flow is classified as non-steady or transient because the deceleration or acceleration is not equal to zero. If V_1 exceeds V_2 temporarily, there is an increase of the water flux into the cube and conservation of mass requires that the water level within the cube rises; conversely, if V_2 exceeds V_1 temporarily, there is a decrease of the water movement into the cube and the water level drops. Superimposed on non-steady flow, there occurs the infiltration of rain or snowmelt, coupled to drainage from overlying aquifers (P); this causes the water level to rise an additional amount of P/μ, where μ represents the storage coefficient. The infiltration or recharge P is defined in this report as vertical flow.

The differential equation describing the groundwater drawdown in an area surrounding an oil sand pit becomes the one-dimensional diffusion equation:

$$\frac{\delta H}{\delta T} = \frac{KD}{\mu}\frac{\delta^2 H}{\delta X^2} + \frac{P}{\mu}. \qquad (1)$$

This equation is solved numerically after non-dimensionalizing:

$$x = \frac{X}{L} \qquad X = Lx \qquad (2)$$

$$t = \frac{KD}{\mu L^2}T \qquad T = \frac{\mu L^2}{KD}t \qquad (3)$$

where H represents the hydraulic potential, T the time, X and Y the horizontal coordinates, K the hydraulic conductivity and μ the volume of water released from or taken into storage per unit area of aquifer, due to a change of the water level corresponding to unit potential. The thickness of the tar sands layer is represented by a constant D. Further non-dimensional variables are:

$$h = \frac{H}{D} \qquad H = Dh \qquad (4)$$

$$p = \frac{PL^2}{KD^2} \qquad P = \frac{KD^2}{L^2}p. \qquad (5)$$

Substitution of (2), (3), (4) and (5) into (1) yields:

$$\frac{\delta h}{\delta t} = \frac{\delta^2 h}{\delta x^2} + p. \qquad (6)$$

Applying Taylor's theorem to the function h at $h(x + \Delta x)$ and $h(x - \Delta x)$, as well as at $h(x + \Delta t)$, and adding and subtracting the terms of the expansion leads to:

$$\frac{\delta^2 h}{\delta x^2}\,i,j = \frac{h_{i+1,j} - 2h_{i,j} + h_{i-1,j}}{\Delta x^2} \qquad (7)$$

and:

$$\frac{\delta h}{\delta t} = \frac{h_{i,j+1} - h_{i,j}}{\Delta t}, \qquad (8)$$

or combining (6), (7) and (8) into an explicit equation:

$$h_{i,j+1} = rh_{i+1,j} + (1\text{-}2r)h_{i,j} + rh_{i-1,j} + \Delta tp \qquad (9)$$

where

$$r = \frac{\Delta t}{\Delta x^2}; \qquad (10)$$

the subscripts i and j represent the dimensions distance and time. Equation (9) has a leading error of order Δx^2 ($\Delta x<1$) (SMITH, 1965).

For reasons of stability, we have to assume $r = 0.1$; in that case, equation (9) becomes the converging and stable explicit

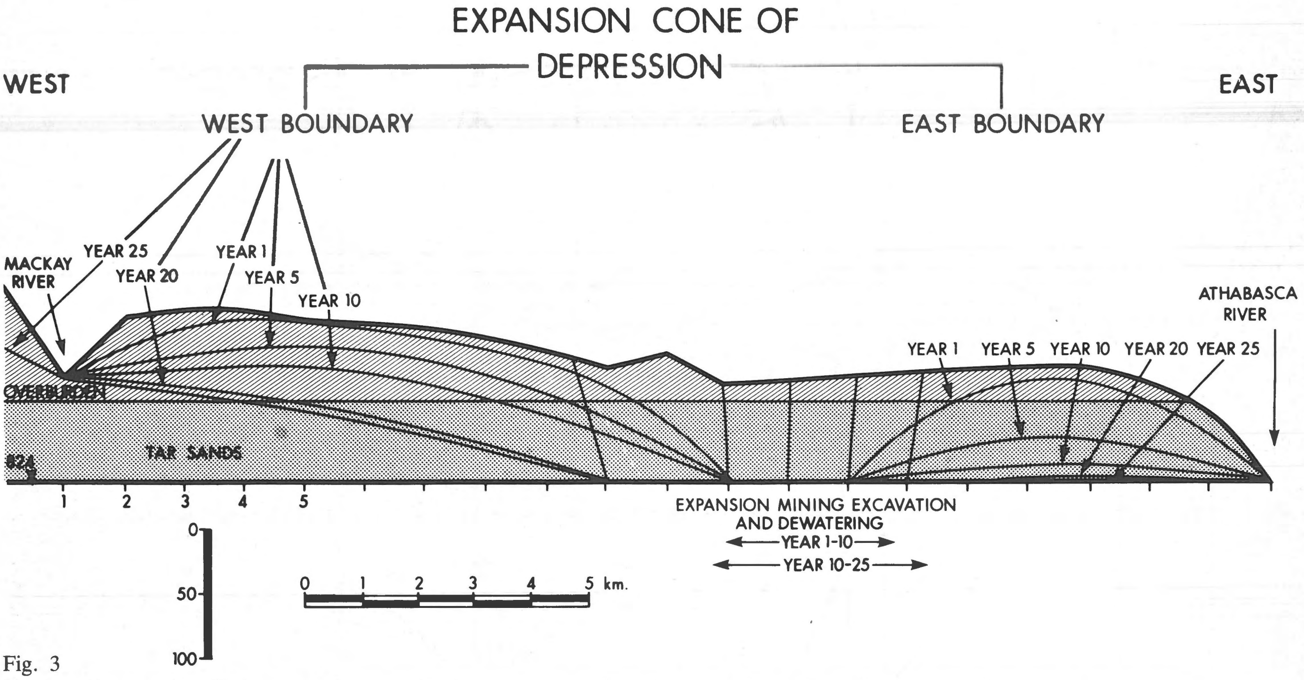

Fig. 3
Computed expansion of the cone of depression in an east-west direction through a tar sands lease bound by two parallel rivers

equation:

$$h_{i,j+1} = 0.1\, h_{i+1,j} + 0.8\, h_{i,j} + 0.1\, h_{i-1,j} + \Delta tp. \tag{11}$$

COMPUTATION OF THE EXPANSION CONE OF DEPRESSION FOR A TYPICAL TAR SAND MINE

The computation of dewatering of an Athabasca tar sand mine has been carried out by applying equation (11) to a typical excavation. The computation assumes hydraulic continuity between the tar sands and the overburden, with superimposed leakage from below. As prerequisite for the calculations, numerical experiments have been carried out to determine recharge rates and permeabilities. An average recharge rate ($p = 0.15$ mm.day^{-1}) has been established from iterative computations (eq. 11) carried out for a geological east-west cross section perpendicular to some river courses in the western tar sands area (Fig. 3). The groundwater recharge rate computations have been carried out, assuming the absence of any open pit or excavation works. Equilibrium is then defined as a condition in the numerical model in which groundwater discharge occurs at points where aerial photographs and maps indicate that natural groundwater discharge features such as creeks and rivers, are in existence (DE VRIES, 1974). For equilibrium conditions to exist, the requirement is that the water table in the numerical model must attain a stable level in the areas between natural creeks and rivers. Iteration shows that equilibrium conditions are reached at $p = 0.15$ mm.day^{-1}, if k_x ranges from 0.6 – 2.0 m.day^{-1}; equivalent to a net groundwater recharge of 55 mm/year or 12% of the average annual precipitation of 450 mm/year. An average horizontal hydraulic conductivity of $k_x = 1.0$ m. day^{-1}, has been derived for the overburden from the top 10% of a range of pump test values published by HACKBARTH (1977). The reason for the higher values is that for economic purposes, e.g. less overburden to be removed, tar sand mines are usually located in river valleys and topographic depressions, which are more permeable due to the concentration of converging groundwater discharge flux lines. The hydraulic conductivity has been checked versus an analytical solution of the symmetric flow problem (ERNST, 1962):

$$h_1^2 - h_0^2 = \frac{pL^2}{4k_x} \tag{12}$$

where h_1 and h_0 represent typical maximum and minimum phreatic levels in the overburden with respect to tributary creek levels. The symbol p expresses a recharge rate and L is the distance between pairs of creeks, draining the discharging groundwater via the tributary branches to the main river valley in the overburden formation. Substitution of typical values for the Athabasca topography such as: $p = 0.00015$ m.day^{-1}; $L = 2500$ m; $h_1 = 10$ m and $h_0 = 0$ m, in equation (12) leads to $k_x = 2.3$ m. day^{-1}. This value is of the same order of magnitude as the value of $k_x = 1.0$ m.day^{-1} which has been found to represent an average overburden conductivity in the range of the numerical experiment. A range of values varying from $k_x = 0.1$-5.0 m.day^{-1} has been employed for the average horizontal conductivities of the tar sands, all associated with effective porosity values of 10% ($\mu = 0.1$).

For reasons of accuracy, a computation has been carried out by dividing a typical cross section (Fig. 3) into 20 equal-

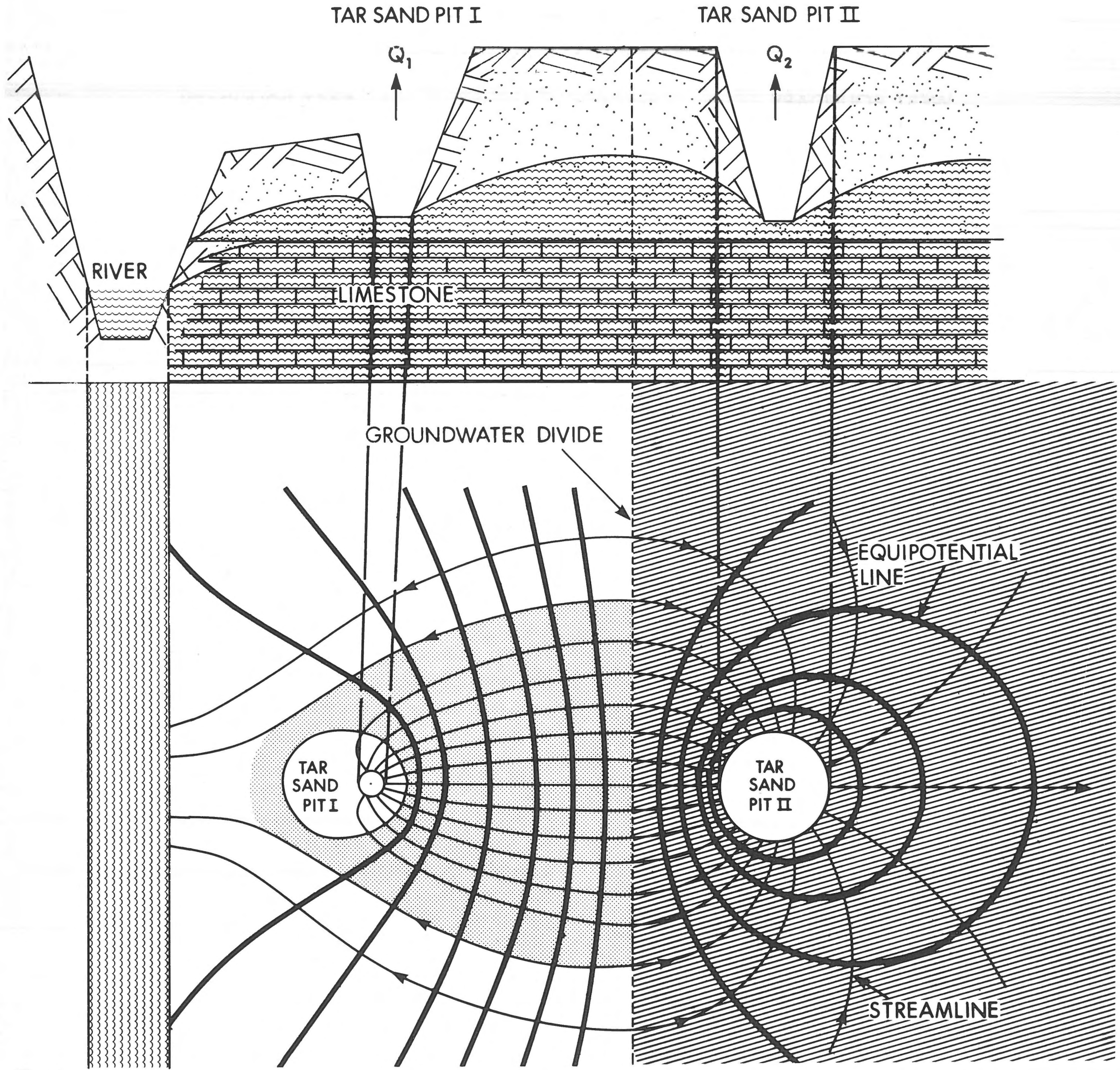

Fig. 4
Comparison of groundwater flow fields surrounding plateau-type and valley-slope type tar sand mines, showing the exceptionally favourable location of the valley-slope type tar sand mine.

distance intervals between 21 nodes, thus $\Delta x = 1/20$. In figure 3, the section is 21.35 km long, therefore L = 21,350 m. One interval measures 1,067 m. The average thickness of the tar sands in figure 3 is D = 78.9 m. The stability criterion requires that $r = \Delta t/\Delta x^2 = 0.1$, therefore, $t = 0.1(1/20^2) = 0.00025$. Equation (3) yields $t = k_x DT/\mu L^2 = 0.00000865\ T$ which establishes the value of one time step at T = 28.9 days. This implies that there are 12.6 computation steps in one year; 126 time steps in 10 years and 315 steps in 25 years.

The vertical dimensions derived from figure 3 have been non-dimensionalized by subtracting an elevation representing the average elevation of the base of the tar sands formation, from the height of land at each node. Subsequently, a maximum elevation in the cross section (364.2 m) is set equal to 1.0 and a minimum elevation (251 m) is set equal to 0.0001. The progress of a trenching-type excavation is expressed by changing boundary conditions. From year one to ten, typical trenches are assumed to be excavated along an existing river valley with little overburden. In the computations three nodal values in an existing river valley must therefore be kept at constant potential of 251 m (non-dimensionalized at h = 0.0001) for a period of 10 years.

For years 11 to 25 of an expanding 16,000 m^3/day mining operation, the number of constant nodal values must be extended to include an area another kilometre east and two kilometres west of the area mined in the first ten years. Assumed excavation conditions are, therefore, that a pit is 2 km wide from years 1-10 and 5 km wide from years 11-25. The reason for using a typical width of 5 km is that, although old excavations are filled in with previously mined, clean, permeable sands, these sands cannot stop groundwater flow. Other conditions, if necessary, can be modelled numerically to accommodate future and different mining plans as they may emerge for different tar sand mines. The results of the computations for a typical mine have been shown in figure 3 as groundwater levels after 1, 5, 10, 20 and 25 years. Although the dewatering computation on the geological profile (Fig. 3) excludes the effect of perched water tables, which are known from practical experience to remain on clay lenses and cause landslides, it does include a steady recharge term from rain and snowmelt ($p_t = 0.00015$ m.day^{-1}).

INTERPRETATION OF COMPUTATIONAL RESULTS

The results of dewatering computations on a typical geological profile in the Athabasca tar sands area show that:

(1) The expansion of a cone of depression towards a deeply incised main river is restricted by the location of the water divide between the main river and its tributary rivers.

(2) The expansion of a cone of depression downstream along the valley of a mine lease is limited by topographical depressions caused by local creek valleys and by the size and locations of tailings and diversion reservoirs which are usually kept close to a plant site. Typical tailings reservoirs for a 16,000 m^3/day plant may reach at maximum expansion a size of hundreds of millions cubic metres, equivalent to the size of Alberta's largest man-made reservoir. Consequently, they modify existing groundwater flow systems to a significant extent. Some parts of tailings and diversion reservoirs influence the groundwater flow in the tar sands mining area when the reservoirs are located on fault zones, karstified limestones, or both.

(3) The expansion of a cone of depression perpendicular to a valley slope from a mine lease reaches and extends beyond the water divide into neighbouring watersheds by year 20 of a mining operation, assuming that a typical water divide is located at a distance of about 10 km from the centre of a mine lease.

(4) The expansion of a cone of depression upstream along the valley of a mine lease takes place practically unchecked. The hydraulic gradients in this direction are usually large, and in some cases, the subhorizontal tar sands deposits may slope down the valley towards a pit. Significant groundwater influx towards deep open pits can be expected from diversion and tailings reservoirs, if they would act as recharge areas. This phenomenon may be enhanced in association with permeable fault systems stretching across a mine lease, sometimes in association with locally karstified limestone. Confirmation of such conditions must be obtained from records on dewatering contours in the tar sands and underlying limestone deposits. A well-documented example of rapid expansion of a cone of depression along one or two preferred permeability directions after 3 years dewatering of tar sands is provided by the analysis of COWARD ET AL. (1978).

(5) Fundamental differences exist between the dewatering of mines located along steep valley slopes, versus mines located on the flat slopes of a plateau (Fig. 4). When a mine is excavated into a valley slope, shown in figure 4 as tar sand pit I, of a deeply incised river valley, then nature has already dewatered and drained this type of slope. Moreover, a mine in such a location intercepts the groundwater discharge from a small area only (Fig. 4). In contrast, a plateau-type tar sand mine (Fig. 4, tar sand pit II) or a mine at the centre of a wide valley intercept the groundwater flow from the entire area. This leads to the conclusion that the total groundwater flow into a tar sand mine of the type 'tar sand pit II' (Fig. 4) is considerably higher than that into mines of the type 'tar sand pit I'. Moreover, mines of the type 'tar sand pit I' could use gravity drainage and natural water courses to dispose of drainage waters, whereas the other type could not.

MITIGATIVE MEASURES

Horizontal and vertical flow rates into an open-pit mine may be temporarily reduced by building up and maintaining an artificial groundwater mound. This constitutes established engineering practice for short-time pit-dewatering schemes. The mitigative action consists of the installation of a screen of injection wells operated in conjunction with, but outside, a screen of pit perimeter dewatering wells. The advantage of this scheme consists of effecting a slowdown of the outward rate of expansion of a cone of depression through a reduction of the outward hydraulic gradient (Fig. 5). Another advantage is gained when the area contributing to vertical flow is reduced. The disadvantages of a groundwater injection screen are:

- A reduction of the stability of the pit slopes by the change in stress field, induced through strong hydraulic gradients near the pit faces.
- An increase in the hydraulic gradient across the pit bottom, which causes increased radial flow and which may precipitate buckling of the pit floor.
- At least a doubling of the number of wells.
- Increased pumping requirements for the pit perimeter dewatering wells associated with changing hydraulic gradients

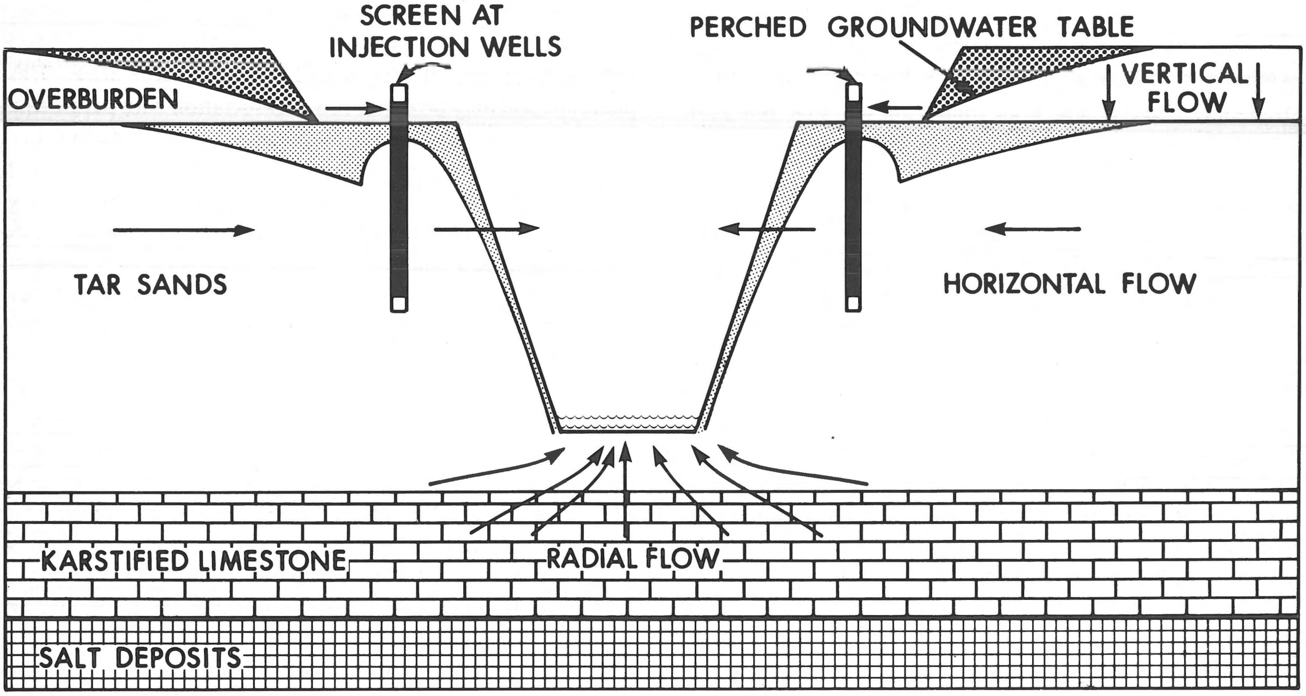

Fig. 5
Screen of injection wells, a short-term remedy for expansion of groundwater depression.

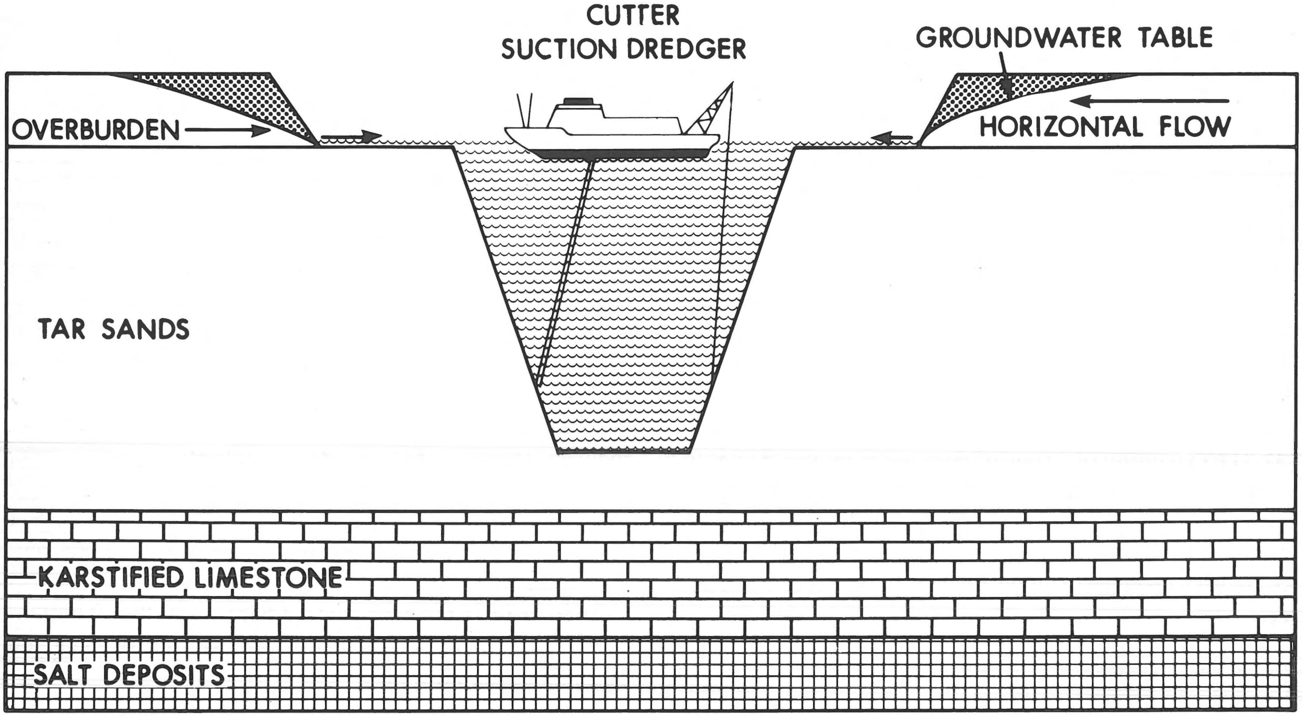

Fig. 6
Cutter suction dredge in a flooded tar sand pit.

toward the pit.

- Difficulties with gas – in injection water – which clogs pores and reduces the flow of water injected into the ground.

An as yet unproven alternative mitigative action to reduce the vertical, horizontal and radial flow of salt water and brines into a pit may consist of dredging of the tar sands from a completely flooded pit; for instance, with a suction cutter dredge or hydraulic jetting dredge (Fig. 6). Such modern excavation procedures require keeping the pit bottom as narrow as possible as soon as dredging has advanced to the lower tar sands and basal clays. The clays resist radial water flow of saline water; consequently they must be replaced. Dredging in a trench, which is partially filled with water becomes more economic with respect to a full pit, but this must be weighed against the costs associated with disposal of more saline water.

WATER PRODUCTION FROM TAR SAND MINES

In order to provide an estimate of the volumes of fresh and brackish water, saline water and brines that may flow into the pits and trenches of a typical mine excavation over the 25-year life of the mine, it is assumed that a net oil production of 16,000 m^3/day is maintained.

Theoretically, as proven in the next sections, the dewatering of an open tar sand mine –where tar sand is overlain and underlain by less permeable strata– takes place in three phases, each lasting a number of years (Fig. 7-1-2-3).

After the stripping of the overburden and excavation of a box cut, the horizontal flow of groundwater starts towards both faces of the excavation (Fig. 7-1). A cone of depression expands laterally into the tar sands whereby fresh, brackish and saline water are produced. This brackish and saline water is initially diluted by fresh water from rain, snowmelt and overburden groundwater. Simultaneously, the withdrawal of water from the pit bottom induces locally restricted flow of saline water and warm brines through the pit bottom. Saline water and brine breakthrough from below the pit floor is restricted to the more permeable areas.

After a few years the expansion of the cone of depression deeper into the tar sands slows down, stops, or decreases locally (Fig. 7-2). The reason is that fresh-brackish water seeps down in such significant quantities from the overburden sands and clays into the tar sands, that the horizontal flow through the tar sands cannot drain fast enough. This phase lasts longer than the first phase, and it continues while the vertical water flow from the overburden remains significant. A complete dewatering of the overburden is not possible since residual water tables cannot drain completely and stagnate above clay lenses. Artificial drainage of those residual perched water tables above clay layers may be carried out via subhorizontal drains, or with dense vertical water-well networks, in order to enhance geotechnical stability. Saline water and brine breakthrough across the pit floor expands from the more permeable to the moderately permeable tar sands areas.

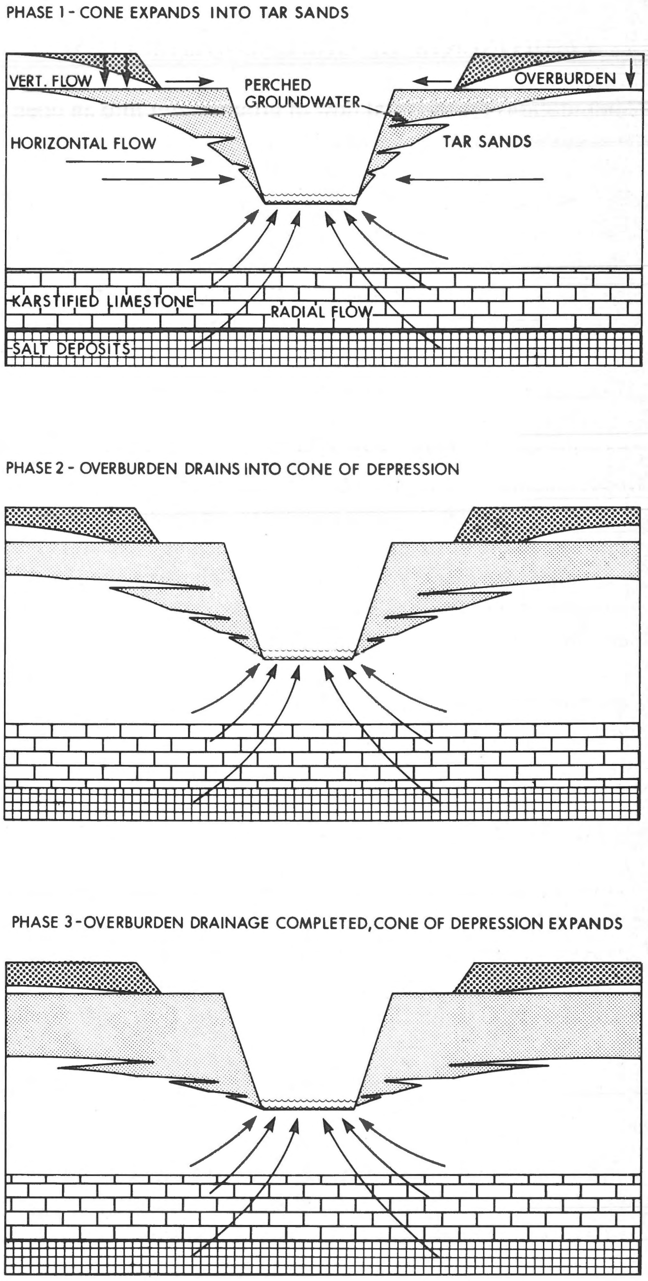

Fig. 7
Three phases in the development of a cone of groundwater depression, surrounding an open tar sand mine.

A third phase starts when the cone of depression begins to expand again further into the tar sands, away from the open pit and into the watersheds of the adjoining rivers (Fig. 7-3). Saline water and brine breakthrough across the pit floor becomes widespread. Throughout phases (1), (2) and (3) the groundwater quality shows progressive increases in salt content and temperature.

VERTICAL – HORIZONTAL – RADIAL COMPONENTS OF GROUNDWATER FLOW

Computations for the total flow of groundwater into an open tar sand mine can be divided into three parts related to vertical, horizontal and radial groundwater flow components. The rationale for this division is based on a superposition of linear systems, as developed by ERNST (1962).

In the tar sand area, rain and snowmelt infiltrate vertically into the ground surface. Even on bare tar sand surfaces, an average of 30% of the summer rain infiltrates, propelled by gravity. This infiltration is defined as vertical flow from ground surface towards a less permeable layer, or formation (Fig. 8A). The vertical flow, on its way down, is of decreasing intensity in accordance with decreasing permeability related to compaction and anisotropy. Horizontal flow (Fig. 8B) is defined as a throughflow into horizontal directions. Wherever gaps exist in the horizontal flow paths, such as excavations or river valleys, an extra flow resistance must be overcome by the horizontally flowing groundwater. This excess resistance is defined as the radial resistance, w, and it leads to radial groundwater flow (Fig. 8C). Radial flow represents a deviation from the horizontal flow. In a simple formula, the sum of vertical, horizontal and radial flow for a homogeneous aquifer is given by ERNST (1962):

$$(D^*/K + L^2/8KD + Lw) = \Delta h/P \qquad (13)$$

where Δh represents the hydraulic head difference, P the net precipitation, K the hydraulic conductivity, L the distance between parallel drainage channels, D^* the depth of the zone of vertical flow and D the thickness of the aquifer. The sum of figure 8A, B, C yields the total groundwater flow as shown in figure 8D.

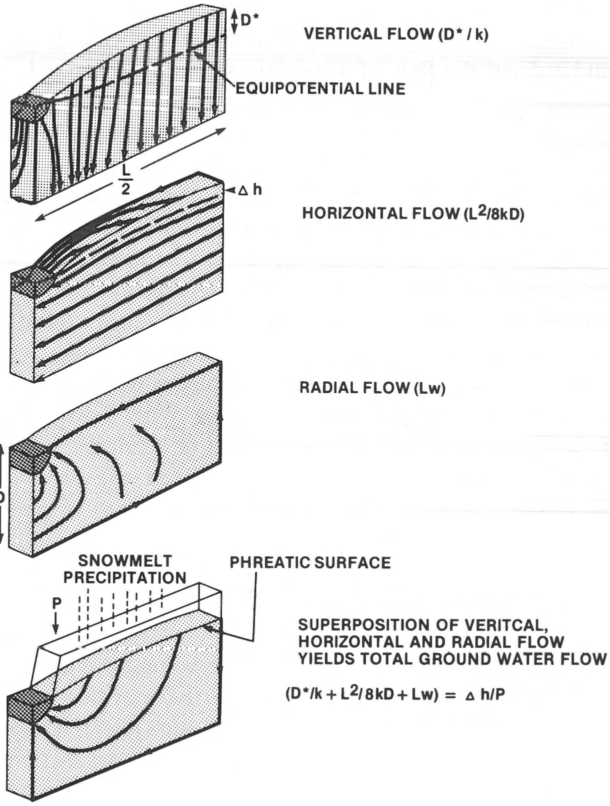

Fig. 8
Vertical flow (A); horizontal groundwater flow (B); and radial flow (C) can be superimposed to yield the total groundwater flow field (D) (Ernst, 1962).

VERTICAL GROUNDWATER FLOW INTO AN OPEN TAR SAND MINE

The vertical groundwater flow contribution towards an open tar sand pit consists of infiltrated rain and snowmelt, minus evapo-transpiration. The net recharge P into a cone of depression in the Athabasca area has been computed in previous sections as 57 and 55 mm/year and rounded off to 50 mm/year since some infiltrated rain is intercepted by ditches. As the cone of the groundwater depression expands while mining progresses, the vertical recharge area increases also. For an initial five years of mining, a size of 25 km^2 has been computed for a vertical groundwater recharge area of a typical pit of 4000 m long. The size of the vertical groundwater recharge area increases as mining progresses (Fig. 3). The computations carried out to determine the development of the cone of expansion after 10 years show that a cone of depression expands to 150 km^2. In the two cases, the vertical flow amounts to:

year 1-5: $25 \times 10^6 \times 0.05 = 1.25 \times 10^6$ per year = 3,400 m^3 per day

year 10-25: $150 \times 10^6 \times 0.05 = 7.5 \times 10^6$ m^3 per year = 20,500 m^3 per day.

HORIZONTAL GROUNDWATER FLOW INTO OPEN TAR SAND MINES

Initial horizontal flow into a tar sand mine has been computed for the first few years of a 16,000 m^3 oil/day open-pit operation of typical dimensions; c.g., 4000 m long, 200 m wide and 60 m deep (Fig. 7-1).

The initial groundwater flow into an open pit has been calculated using an analytical solution of the diffusion equation. It has been assumed that the recharge P (vertical flow), computed in the previous section, can be superimposed and added after a separate computation. The governing equation is:

$$\delta h/\delta t = KD/\mu\,(\delta^2 h/\delta x^2). \qquad (14)$$

The conditions for the application of equation (14) are that in a horizontal unconfined tar sand aquifer from which the overburden has been removed, a 60 m deep open trench is rapidly excavated with large draglines and bucketwheels. Initially, the groundwater level is y_o at $t = 0$, where y_o represents the top of the tar sands. The groundwater level h in the neighbouring area that has been stripped, is in dynamic equilibrium before the mining starts; therefore $h = y_o$. While the open pit is being excavated, the water level in the open pit is lowered within a few months by an amount Δy at $t = 0$. Consequently, the water will ooze out of the tar sands into the pit. This continues until the groundwater levels and the water level in the pit are again in equilibrium. Equation (14) can be applied if $\Delta y < D$, so that D is not affected too much by the lowering water table. This implies that the analytical solution is useful during the first few years of the mining operation, and to a lesser extent under conditions when many residual and perched water tables prevail. Equation (14) describes continuous horizontal flow, and also horizontal flow in tar sand slabs supplemented by vertical flow through cracks between tar sand slabs (KIRKHAM, 1967).

In analogy with heat flow, the boundary conditions become:

$t = 0 : h = y_o$ for $0 < x < \infty$;

$t > 0 : h = (y_o - \Delta y)$ at $x = 0$.

In this case, after non-dimensionalizing (14) one obtains:

$$A = (KD/\mu)t. \tag{15}$$

Introduction of the dummy variable u:

$$u = x/2\,((KDt/\mu))^{1/2} \tag{16}$$

and substitution in (14) leads to an analytical solution of the diffusion equation:

$$\Delta h = (y_o - h) = -\Delta y \,\mathrm{erfc}\,(u) \tag{17}$$

where erfc is the complimentary error function. The flow rate q_x towards the pit per unit length of open pit, from one side only, at location x from pit is given by:

$$q_x = KD\,(\Delta y)\,A^{-1/2}\,e^{-u^2}/(\pi)^{1/2}. \tag{18}$$

At the edge of the pit ($x = 0$) the flow rate expressed in m^2/day becomes:

$$q_o = KD\,(\Delta y)\,(A\pi)^{-1/2}. \tag{19}$$

Total flow into the pit per metre length becomes $2q_o + 2\pi r q_o$, when r represents one half the width of the pit ($r = 200/2 = 100$ m).

Equation (19) has been solved for two permeability conditions which represent the limits of a range of conditions which will most likely be encountered in a tar sand mining operation. Condition (1) assumes a tar sand permeability of silt, $k = 5$ m.day^{-1}, and condition (2) assumes a tar sand permeability of clay, $k = 0.1$ m.day^{-1}. Substitution in equation (15) of $D = 78.9$ m, $t = 365$ days, $\Delta y = 60$ m (tar sands will be excavated completely down to the limestone) and $\mu = 10\%$, yields for condition (1): $KD = (5)\,(78.9) = 394.5$ m.day^{-1}; for condition (2) $KD = (0.1)\,(78.9)$ $m^2 \cdot$day^{-1}. After one year the flow of water into the pit under condition (1) is computed from:

(1) $A = (394.5/0.1)\ 365 = 1{,}439{,}925$ m^2.

Substitution in (19) yields:

$q_o = 11.129$ m^3/day per metre of pit length

Total horizontal flow is 96,024 m^3/day, rounded off to 600,000 barrels per day for an excavation 4000 m long, 200 m wide and 60 m deep. Thus, 600,000 barrels per day of water would be produced vs. 100,000 barrels per day of oil.

Under condition (2) the flow is computed from:

(2) $A = (7.89/0.1)\ 365 = 28{,}799$ m^2;

$q_o = 1.574$ m^3 per day per metre of pit length.

Total flow amounts to 13,580 m^3/day or 85.000 barrels per day (rounded off).

Horizontal groundwater flow is mostly determined by the horizontal permeability field of the tar sands and by the dimensions of the open mine. So far, mining engineering information is available for a period of 10 years, so that it is relatively well-known what becomes of the configuration of a 'typical successful tar sand mine' after 10 years of operation. Beyond 10 years, no data exist as yet. For that reason, the horizontal flow into the open tar sand pits during year 10-25 has been assumed identical to that in the first 10 years of operation.

SALT WATER CONING UNDER TAR SAND MINES AND ARTESIAN LENSES

Fresh water is defined as having a total dissolved solids concentration of 0-1000 ppm; brackish-water ranges from 1000-10,000 ppm; salt water from 10,000-100,000 ppm and brine has in excess of 100,000 ppm. In the Athabasca mining area the entire range from fresh water to 250,000 ppm brines has been encountered.

In the tar sand mining area the tar sands base consists of 50-150 m of karstified Devonian limestone, underlain by hundreds of metres of evaporites. In the pre-mining phase there is initially a stable condition of fresh water lenses in the overburden overlying the brackish-salt water in the tar sands, with three quantities determining the shape of the fresh water bodies: h, Z and D′ (Fig. 9B) where the depth D′ (EDELMAN, 1972) is defined by:

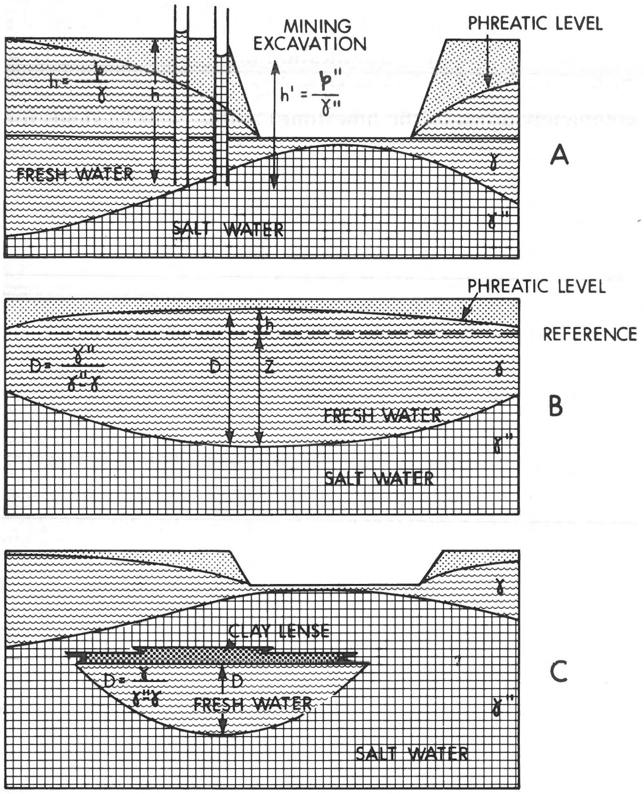

Fig. 9
Difference in fresh and salt water potentials (A); over-pressure in a phreatic fresh-water lense (B); and over-pressure of an 'artesian' fresh-water lense below clay (C).

$$D' = h + Z = \gamma''/(\gamma''-\gamma)\phi/\gamma. \tag{20}$$

The densities γ and γ'' are those of fresh and salt water respectively; h represents the piezometric height with respect to reference level; Z is the depth of the interface below datum, and $\phi = h\gamma$ is the fresh water potential. Equation (20) shows that the phreatic surface and the interface are similar curves; the latter can be obtained from the former by multiplying the figure with a factor: $\gamma/(\gamma''-\gamma)$ with respect to datum. In the tar sands mining area, salt water of 35,000 ppm (sea water) is locally encountered at a depth of 60 m below ground level. Equation (20) shows that, in the overburden, an overpressure of h = 1.5 m would be required to maintain a fragile steady state equilibrium with respect to the top of the tar sands. It is obvious that the excavation of overburden and 60 m tar sands, followed by dewatering of the tar sands sets in motion a long-lasting unsteady flow of salt water ('coning') whereby overlying brackish and fresh water is displaced. The result is shown in figure 9A as an irreversible movement of salt water and brines, coning up under and into the excavation. The driving force is the difference in density between two fluids. The total flow of saline water into tar sands is governed by the summation of the effects of density differentials, counteracted by osmotic suctions, modified by diffusion and dispersion. Dispersion is mainly governed by (λd)½ where λ represents the distance from the salt deposit to the pit bottom while d represents the grain diameter of the dispersive medium.

In the tar sands, a special salt-water phenomenon is encountered, namely, that a number of 'artesian' confined fresh or brackish water bodies are held in place under clay lenses. In that case (Fig. 9C) the shape of a confined fresh water body of thickness D* is given by:

$$D^* = \phi/\gamma\,(\gamma/(\gamma''-\gamma)). \tag{21}$$

A comparison of a confined lense (equation 21) and a static phreatic fresh water lense (equation 20) shows, assuming a density of 1000 kg/m^3 for fresh water and a density of 1025 kg/m^3 for salt water:

eq. (20): $D' = 1{,}025/(1{,}025 - 1{,}000)\ (\phi/\gamma) = 41\ h$;

eq. (21): $D^* = 1{,}000/(1{,}025 - 1{,}000)\ (\phi/\gamma) = 40\ h^*$.

In other words, a confined fresh water lense will 'push' against the bottom of a clay layer with a force of D*/40 metre water pressure. If penetrated and produced, the fresh water (Fig. 9C) becomes 'artesian' with respect to salt water, until the force has been depleted exponentially.

Breakthrough of salt water into an open-pit tar sand mine

Excavation of an open tar sand pit, 60 m deep, 200 m wide and 4000 m long, results in the removal of a large hydraulic head (60 m) from the underlying saline water (Fig. 10). The saline water, no longer suppressed by the weight of overlying brackish and fresh water, flows toward the surface. This is defined as 'salt water breakthrough'. On a similar scale, it is a familiar phenomenon in oil and gas production where it has been defined as 'coning', usually resulting in unfavourable oil-gas/water ratios. Just as in the case of oil well coning, breakthrough of salt water into an open pit results in unfavourable oil/water ratios.

A typical breakthrough of brine into tar sands from salt beds underlying a limestone of thickness Z = 120 m can be expressed (LERMAN, 1970) by:

$$C = C_i + (C_s - C_i)\,Ut/z. \tag{22}$$

Equation (22) has been derived from an analytical solution of the one-dimensional diffusion equation for large values of time (t) and for a diffusivity coefficient of the order of $10^{-9}m^2s^{-1}$.

The symbol C represents the concentration (molal); the subscripts s and i indicate 'saturated' and 'initial' concentrations, whereas U represents the groundwater flow rate (in m/day) from the salt beds via the limestone into the tar sands. Assuming two typical effective vertical permeability values for the limestone under conditions of unit hydraulic-head-gradient yields:

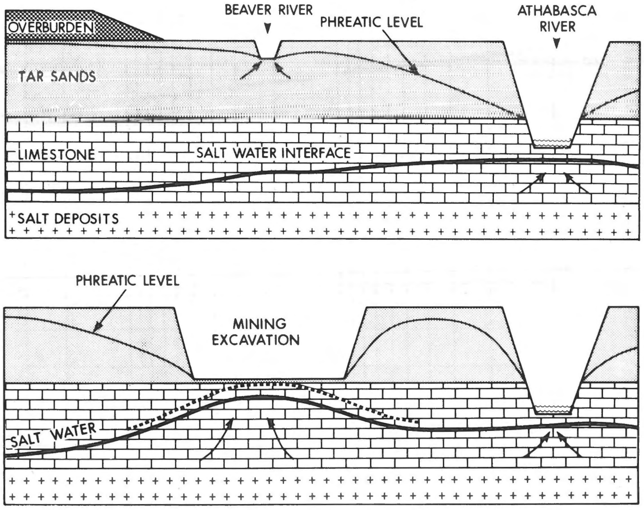

Fig. 10
Coning of salt water and brines as a result of the groundwater dewatering of a tar sand excavation.

(1) Average limestone permeability: $k_z = 0.002$ m/day → $U_1 = 0.002$ m.day^{-1}
(2) Low limestone permeability: $k_z = 0.00004$ m/day → $U_2 = 0.00004$.m day^{-1}.

The use of unit head gradient appears justified in the case of the geometry of a flow field surrounding a typical open pit mine with 50° slopes. Moreover, for economic reasons, open pits in tar sands are usually located in groundwater discharge areas in topographically low regions. This implies that for two reasons, significant hydraulic gradients are likely to exist in typical prospective mine settings in the Athabasca area. Substitution of given U_1 and U_2 into equation (22) and assuming an initial concentration at the base of the tar sands of $C_1 = 0.2$ molal (11,700 ppm) NaCl versus a saturated concentration of $C_s = 6.1$ molal (357,000 ppm) at 10 °C at the top of the salt deposits, yields for $C = 0.5\ C_s$: $t_1 = 80$ years and $t_2 = 4000$ years.

This indicates that, theoretically, the karstified as well as the non-karstified limestone underlying the tar sands must be highly saturated with NaCl-brine from underlying salt beds, at least in those prospective mining areas with large hydraulic gradients in groundwater discharge areas. Field data confirm this theoretical result. Some 10,000 years have passed since the last glaciation. Consequently, enough time has been available to fulfil even the low permeability conditions required for $t_2 = 4{,}000$ years. At the termination of the last glaciation the land ice melted. Since then a new hydraulic and groundwater regime, which resembles present conditions, has been established in the Athabasca area. The question which must be addressed for open-pit tar sands mining is: 'How long will it take for deeper salt water, containing 60,000 ppm NaCl, to displace 20,000 ppm NaCl salt water, which is now present at shallow depths in discharge areas in the basal tar sands some 10 m above the limestone?'

This question must be answered for the upper boundary conditions where an open pit of depth 50 m is excavated into 60 m of tar sands such that 10 m of tar sand remains on the limestone surface. The lower boundary condition assumes a constant supply of 178,000 ppm NaCl brine at the top of the limestone. The pit geometry is assumed such that unit hydraulic head conditions prevail.

Substitution of $C = 1.0$ molal; $C_i = 0.3$ molal; $C_s = 3.05$ molal and $U_l = 0.002$ m/day in equation (22) is warranted since the basal clays, low-grade tar sands and tar sand spoils remain on the limestone surface in the excavation process. Under these conditions equation (22) yields $t_l = 3.5$ years.

This implies that, in a typical tar sand setting and depending on the concentration gradient of the brine at the top of the limestone with respect to the lower concentration of the salt water in the basal tar sands, conditions are fulfilled such that salt water and brine breakthrough into an open pit can be expected within 5 years after opening of a box cut. Breakthrough is accelerated by limestone and basal tar sands permeabilities in excess of $k_z = 0.002$ m/day, but slowed down by hydraulic gradients of less than 1 metre per metre.

The mechanism of salt water breakthrough in the theoretical model used for this open mine setting (eq. 22) is essentially a case of 'piston-flow', where the dilute brine of initial concentration C_i is made to occupy progressively smaller fractions of the volume $(1 - Ut/Z)$. The dilute is being displaced due to the inflow of concentrated brine C_s from below into a groundwater discharge area, such that the two brines do not mix in the process. Mixing is not probable because of the significant density differences between dilute and concentrate.

Equation (22) indicates that the time which is required to reach steady flow of water into an open pit underlain by a stratification of fresh, brackish, salt water and brines, is much longer than the time needed to reach steady flow to a phreatic surface in a one-fluid system. Long lasting unsteady flow in a two-fluid system is the rule rather than the exception, because it can be proven (EDELMAN, 1972) that if two fluids of different densities are in contact with each other along a sloping interface they cannot both be at rest. Consequently, a steady-state equilibrium is the exception in the context of open-pit tar sands mines.

Radial flow of salt water and brines into pit

Before salt water breakthrough occurs, radial flow of salt water into an open pit mine remains restricted, since it takes time to diffuse through the bottom of the excavation. After breakthrough, radial flow of salt water increases sharply. Pumping of water from an open-pit mine induces not only horizontal flow, through the high bank, but under the pit floor the originally horizontal flow lines are now bent from a horizontal into a radial direction towards the pit. This type of flow is defined as radial flow (Fig. 8). Radial flow is associated with an extra groundwater flow resistance, defined as the radial resistance w:

$$w = \Delta h_w / q_o \tag{23}$$

where Δh_w represents the hydraulic head difference between the groundwater level at distance x from the pit (h_x), and the groundwater level below the pit bottom (h_o); q_o is defined as the total outflow, per metre pit length, per day in a vertical direction through the bottom of the open pit. The radial resistance w of an open excavation of width B_w and depth B_h where $B_h = 0.3\ B_w$ equals (ERNST, 1962):

$$w = 1/\pi k_z \{\ln \sin h\, (\pi B_w/4D)\} \tag{24}$$

where D represents the effective thickness of the aquifers plus overburden and k_z its vertical permeability. For the analysis of radial flow towards a typical tar sand mine, two conditions have been considered, which are expected to occur side by side in the mining trenches.

(1) The first condition would occur when all tar sand is excavated down to the limestone, or down to a clay layer on top of the limestone. The limestone or clay layer would constitute the pit floor. In that condition, two permeabilities are expected to occur side by side in and below the pit floor:

(a) The bottom layers of the tar sands and the karstified limestone have a relatively high vertical permeability k_z = 0.002 m/day.

(b) The vertical permeability of the tar sands is reduced by clay layers and the limestone is not karstified; k_z = 0.00004 m/day.

For both permeability conditions the width of a typical open pit is assumed to be B_w = 200 m. The head difference for vertical flow equals the total tar sands depth D = 78.9 m and $\Delta h_w = h_y - h_o$ = 60 m; the length of a typical pit amounts to 4000 m.

Substitution of the larger permeability value, and given B_w and D in equation (24) yields w = –204 day/m, whereas for case (b) w= –10,177 day/m. Since $q_o = (h_x - h_o)/w$, substitution of the two radial resistance values yields a radial flow of salt water in case (a) of 1,180 m^3 per day and in case (b) of 25 m^3 per day.

(2) Between 3.5 and 5 years after opening of a box cut, it has been shown that, theoretically, salt water breakthrough can take place. This will probably lead to a second condition, which could occur when the tar sands pit is partially filled in to combat salt water influx. However, the amount of saline water and brine flowing into an open pit is then no longer controlled by the little permeable limestone and clay layers (k_z = 0.00004–0.002 m/day), but rather by the permeability range of spoil or tar sands, characterized by k_z = 0.1–5 m/day.

Substitution of the larger k_z values in equation (20) yields w = –14.46 day/m and w = –0.29 day/m for the radial resistance values. These values would indicate a strong increase of the flow of saline water and brines into the pit, ranging from 6,000–310,000 m^3/day.

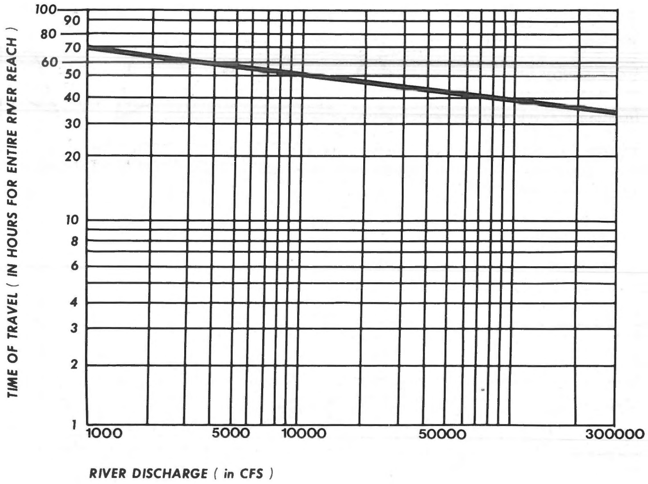

Fig. 11
Time of travel versus discharge for Athabasca River from Ft. McMurray to Embarras Portage (near Lake Athabasca).

SALT WATER DISPOSAL

Underground saline waste water disposal at projected rates of 6,000–300,000 m^3/day is perhaps feasible (HACKBARTH, 1977), but hardly affordable. Consequently, the disposal of salt water and brines at the calculated flow rates, especially after salt water breakthrough, may present a challenge. Brackish water, saline water or brines, if disposed of in rivers contributing to the major river – which is the Athabasca River – have a temperature and density different from the Athabasca River. Therefore mixing in this river without specially designed diffusors could be of limited extent. Travel time of waste waters in the Athabasca River is short and injected salt currents could end up in downstream Lake Athabasca (area 8000 km^2) 1-3 days later, depending on the Athabasca River flow rate (Fig. 11). Salt water, depending on its density contrast with river waters, may float towards the lake exit near Fort Chipewyan and/or sink to the bottom of the large inland lake, Lake Athabasca. The shallow bedrock sills in the outlet of Lake Athabasca near Fort Chipewyan could prevent drainage and/or concentrate the brackish currents, for example during the winter time at the lake outlet below the ice cover. The annual turnovers of the waters of the lake would affect the brackish water distribution, depending on their density-temperature contrasts. At higher rates (5 m^3s^{-1} per mine) of salt water waste disposal in the Athabasca River, the fresh waters in the Albertan part of Lake Athabasca are expected to be influenced before the end of one 25-year mining period, and especially during the winter months, characterized by low river discharges. In February-March, the average monthly runoff ranges from 100-200 m^3s^{-1}, in contrast to the month of maximum runoff (July) when flow amounts to 1450 m^3s^{-1}. The average annual flow of the Athabasca River amounts to 700

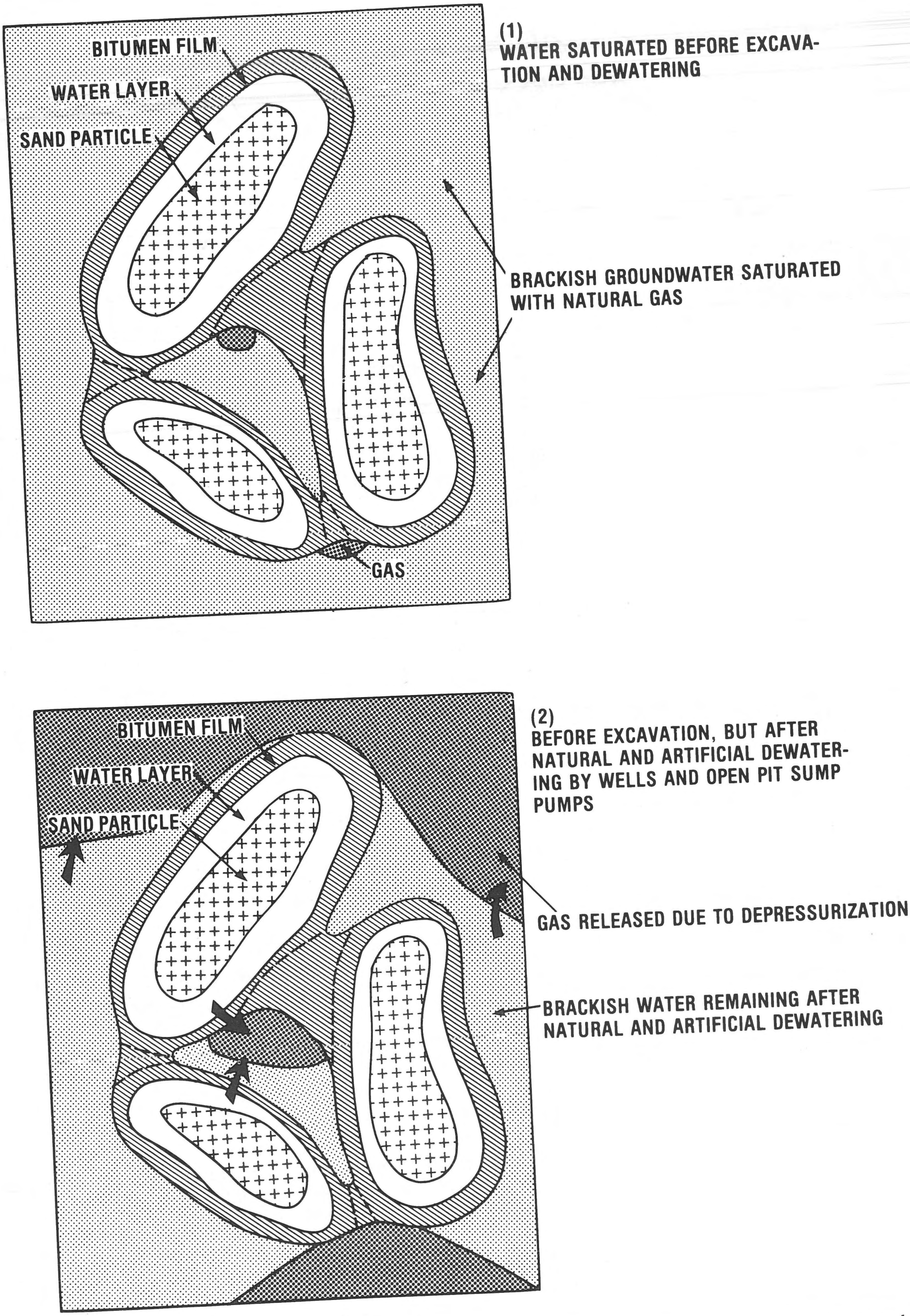

Fig. 12
Theoretical cross sections of tar sand sample showing water and gas-saturated sands before excavation (1); reduced water and gas saturation before excavation, but after groundwater dewatering (2).

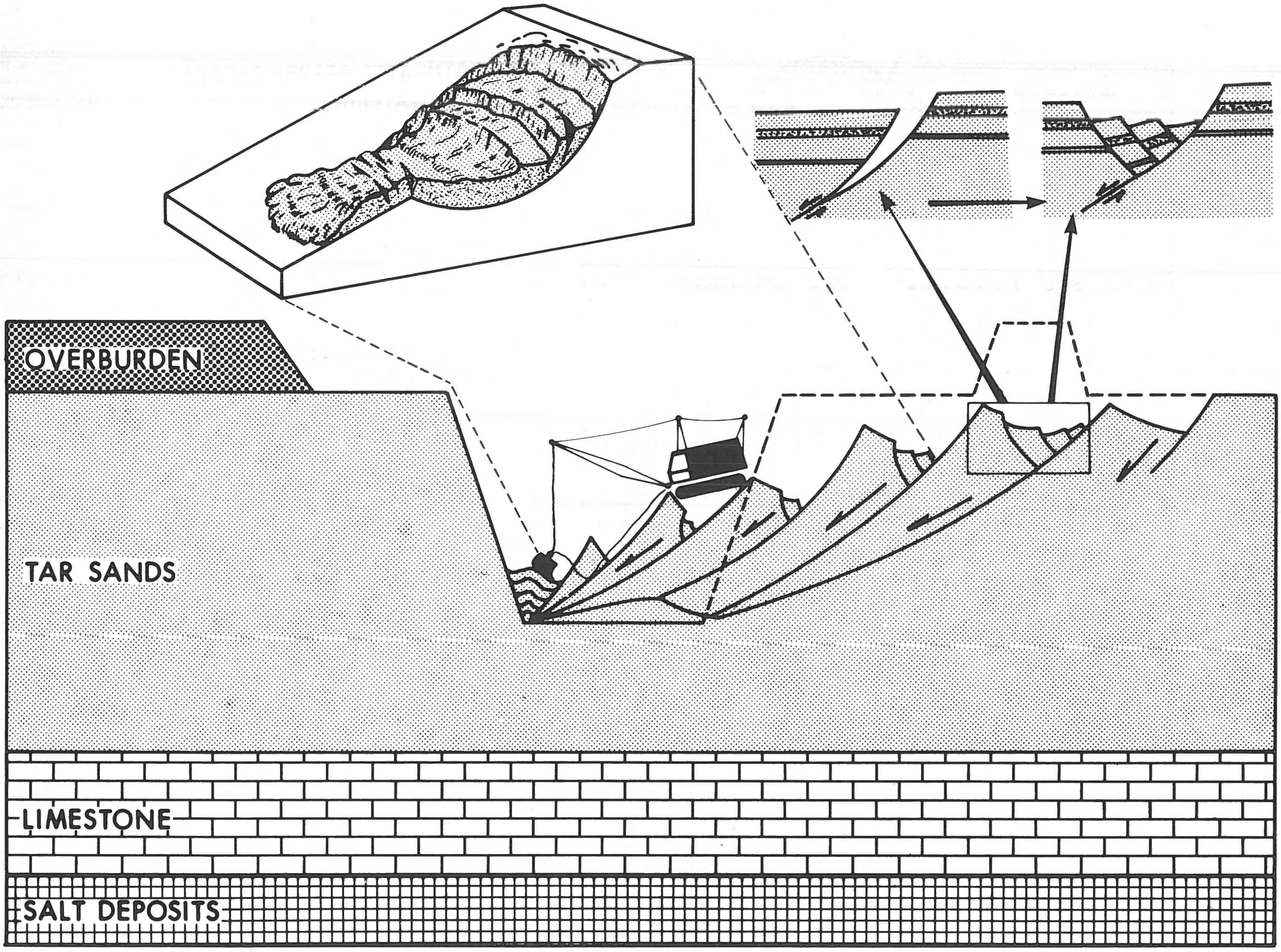

Fig. 13
Model of landslide in 60 m deep open-pit tar sand mine with steep slopes and one bench only.

m^3s^{-1}. Upstream from the tar sand area, the Athabasca River water is of high quality with average concentrations of Na^+ 10 ppm; Cl^- 5 ppm; Ca^{++}40 ppm; Mg^{++}10 ppm and HCO_3^- 140 ppm (INLAND WATERS DIRECTORATE, 1975).

INFLUENCE OF DEWATERING ON LANDSLIDES

Stress fields in Athabasca tar sands and partial pressures of water, oil and gas in those tar sands have changed over the last 10,000 years. Land ice loads during glaciations, to about 10,000 years ago, have compressed the tar sands to such an extent that even after millennia of post-glacial rebound, tar sands apparently still remain in a somewhat over-consolidated state. Excavation and dewatering of overburden and tar sands is now causing a new change in the stress fields.

This change may cause bank instability associated with dewatering, removal of the tar sands overburden and excavation of the tar sands and basal clays.

As shown in the previous sections, dewatering of tar sand excavations, followed by expansion of a cone of groundwater depression, results in a vertically downward flow of groundwater from the less permeable overburden into the more permeable tar sands. In the surroundings of mining areas, dewatering can cause consolidation of the overburden. Inside the mining areas, overburden is removed to permit excavation of the tar sands. Overburden removal leads to tar sand expansion on account of: (1) the escape of gas in solution from depressurized tar sand pore fluids; (2) the elastic deformation of tar sand grains; (3) the rearrangement of tar sand grains; and (4) swelling of clays. Initially, overburden removal from the tar sands is accompanied by a relative decrease of grain stresses and shearing resistance in the lower tar sands. Also, gas escaping out of water and oil solutions, causes initial swelling of the upper tar sand surface. After water drainage and gas escape, excavation follows. This sequence has been theoretically depicted on a microscopic scale in figure 12 (1) and (2). Later, when hydraulic potentials at the base of the tar sands decrease only at a slow pace while a cone of groundwater depression is developing, a relative increase in partial water, oil and gas pressures can also account for the swelling of basal clays interspersed in basal tar sands. An increased water content of compressible and impervious swelling clays reduces their shearing resistance.

In contrast, rapid water drainage of the upper tar sands causes a relative increase in grain stress and shearing resistance balanced by a relative decrease in partial water, oil and gas pressures. Further dewatering after excavation and during stock-piling may influence the processibility of tar sands. There may be processing problems when oil adheres stronger to the clay minerals in the pores between tar sand grains.

During open-pit mining, vertical normal stresses change continuously; consequently, shear stresses change, resulting in dynamic changes by deformation and a possibility for open-pit landslides. Maximum shear stresses during initial excavation occur theoretically halfway up the high wall, but as deformation, loading and unloading of tar sands occur, the stress field changes continuously. In the lower tar sands, reduction of the normal stresses and associated swelling of clays causes a reduction of frictional resistances. Such conditions are also conducive for landslides along the high walls of an open pit (Fig. 13). Tar sand landslides along a high wall of an open pit cause temporary adjustments of stress fields. In a tar sand open-pit mine, landslides are triggered or caused by a combination of factors and conditions, such as:

(1) Less resistant clay layers, which absorb rain or snowmelt waters, can act as slip planes, while residual groundwater tables provide the additionally required fluid potential.

(2) Pre-existing geological shear and tension faults near a boxcut, combined with temporarily increased water, gas and oil pressures can facilitate slumping during snowmelt or rainfall supplemented by melting ice lenses.

(3) During spring or summer, air inclusions caused by rain or snowmelt infiltration can create a trigger mechanism in brief, but significant rises of the groundwater table, occasionally equivalent to 50-60 times the amount of infiltrated precipitation of snowmelt ('Lisse' effect).

(4) On steep pit slopes, cohesion of tar sands is temporarily reduced due to unloading, excavation, ripping and blasting, while a sub-vertical force, resultant of a sub-horizontal groundwater flow force, and the gravity force, contributes to steep slumps. The term 'cohesion' refers to a condition which is not directly due to molecular interaction but to the shearing resistance of absorbed water layers around soil particles.

(5) Increased shear stresses develop after loading of a high bank with tar sand windrows or stockpiles (Fig. 14). These windrows have a loose packing as a result of the excavation process, which occasionally includes a ripping and blasting phase. Stockpiling causes a larger load in the centre of the tar sands windrow with respect to the sides (Fig. 14). Consolidation is thus more pronounced in the centre than at the edges. This differential consolidation sets up the wellknown bow-shaped shear stress fields in a stockpile (Fig. 14), resulting in new consolidation at the edges of the stockpile (HUIZINGA, 1969). When the design-bearing capacity is approached, the stockpile starts displaying bulging and rotation on the sides in the underlying tar sands (Fig. 14). Shifting and sliding in stockpile faces occur when the stress distribution is changed such that the overloaded areas are relieved while other areas take a greater part of the load. This dynamic condition created by stockpile sliding can in turn trigger larger landslides especially when the tar sands next to the open pit cover a deposit of swelling basal clays, which are compressible, impervious and display low shearing resistance.

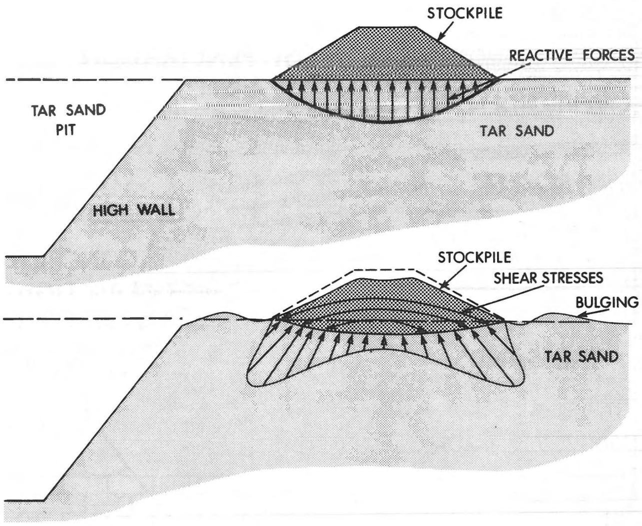

Fig. 14
Loading of tar sand feed on high bank, causing bulging of tar sand and shear stresses in stockpile.

(6) The initial shearing resistance of compressible and impervious clay layers in the tar sands is hardly influenced by unloading or loading, which explains why temporary excavations in tar sands have been safely carried out, with steep slopes (70°), much steeper than possible in unconsolidated sand (35°). Apparently, a change in effective stresses is initially absorbed by the water and oil in clay pores. In contrast, the effective stresses and associated shearing stresses in pure tar sands without clay change more rapidly under the influence of excavation or loading. In unconsolidated sands, the shearing resistance decreases momentarily as a function of excavation; in clay, only very slowly (NANNINGA, 1960). Since the Athabasca tar sands contain sands, silts and clays in rapid succession, the actual geotechnical behaviour of the tar sand ranges between the extremes of sand and clay. Block-shaped landslides can be expected in the winter time as a result of a build-up of groundwater tables – shown as thick black lines in the top of figure 15 – and increased gas pressures. This condition may develop during November-February when air tight concrete frost retards the outflow of groundwater through the high banks (Fig. 15). Ice crystals in the pit slopes or on high banks exert significant stresses (suction) on surrounding

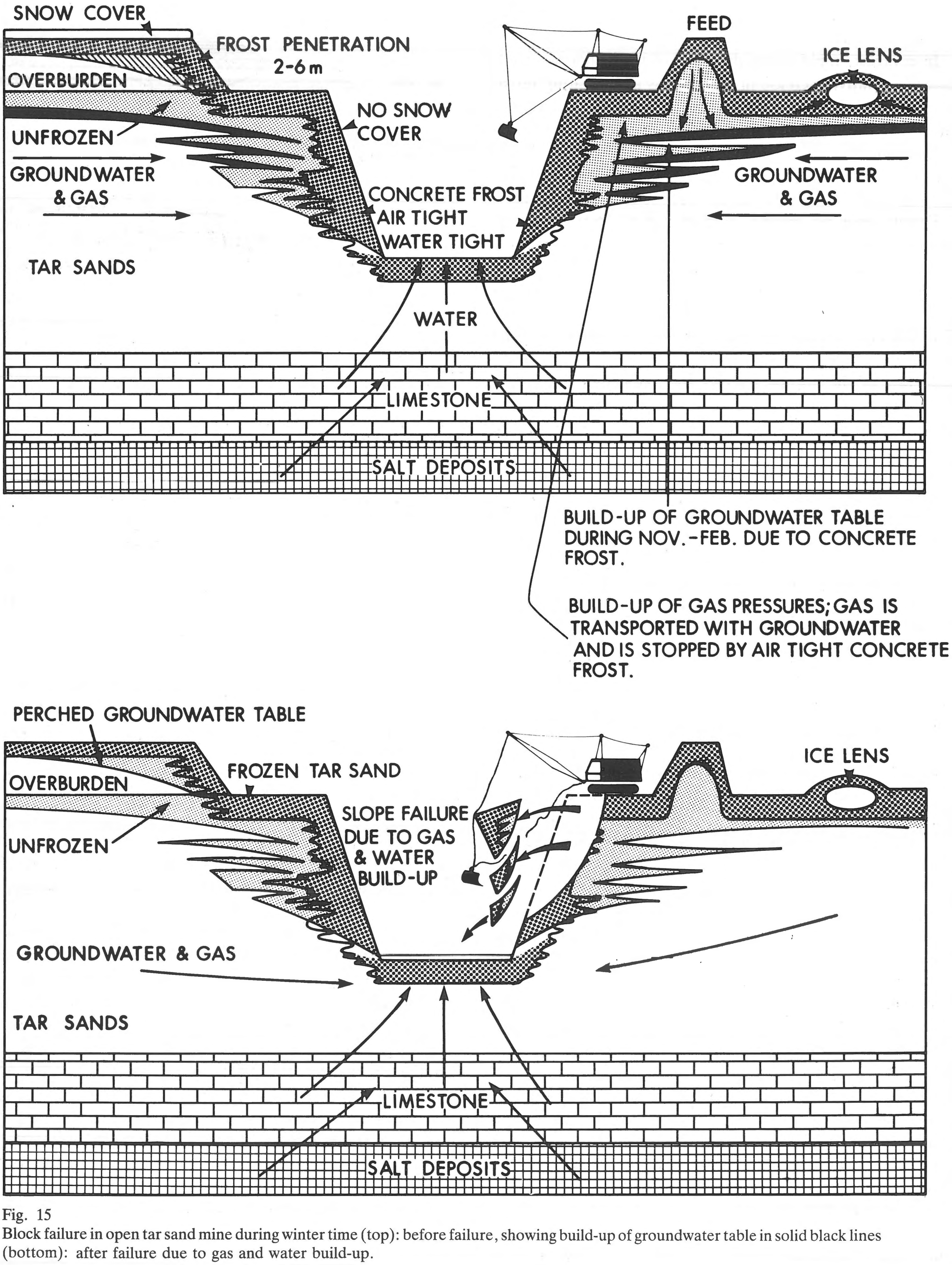

Fig. 15
Block failure in open tar sand mine during winter time (top): before failure, showing build-up of groundwater table in solid black lines (bottom): after failure due to gas and water build-up.

groundwater and cause the growth of ice lenses and the accumulation of partially dissolved gas under pressure.

GEOTECHNICAL CONSEQUENCES OF FAULTS AND KARST IN THE ATHABASCA TAR SAND AREA

Geological maps (Hackbarth, 1977) show that a 220 km long NNW-SSE primary fault in the Precambrian basement crosses the western central part of the tar sand mining area, where it has a vertical displacement of 60-70 m. In the Athabasca mining area the formations overlying the Precambrian consist of salt, limestone, tar sands and overburden. The most likely primary fault system for the western tar sand open-pit mining area, selected on theoretical grounds, appears to be a configuration with a fault angle of 80° (Horsfield, 1977). Any system of primary and secondary faults in the tar sands must for theoretical reasons be associated with yet another system of faults, defined as the tertiary system. The tertiary system consists theoretically of tension shear faults (de Sitter, 1956, p. 130), at an angle ranging from 15-45° with respect to the principal stress field (Fig. 16). Faults of the tertiary system have not necessarily experienced recent motion along the fault planes, but they may play a role in the stability of excavations in tar sands, even if the tar sands are regarded as an extremely viscous fluid. Given the age of the fault planes and the prevalent conditions of brackish-salt groundwater flow in the tar sands, there is a possibility for the growth of new clay minerals at ambient temperatures along these latent fault planes.

There is evidence that valleys of tributary rivers of the Athabasca River represent a karst-surface expression of the primary fault system. Apparently, the faults are zones of weakness which offer less resistance towards chemical and mechanical erosion in the geological deposits. For example, the present valley shapes of the Beaver River-Mildred Lake depression are reflected in the buried limestone karst topography at the same location 60 m below the present land surface. The limestone topography in the tar sands areas suggests that large sinkholes are associated with secondary and tertiary fault patterns. Some open limestone sinkholes and caves afford presently a direct flow of saline water through the karstified limestone, via tar sands and overburden to the surface, despite the fact that some drill holes have indicated that a thin dense clay layer exists at the base of the tar sands which could prevent significant flow (Ozoray, 1977).

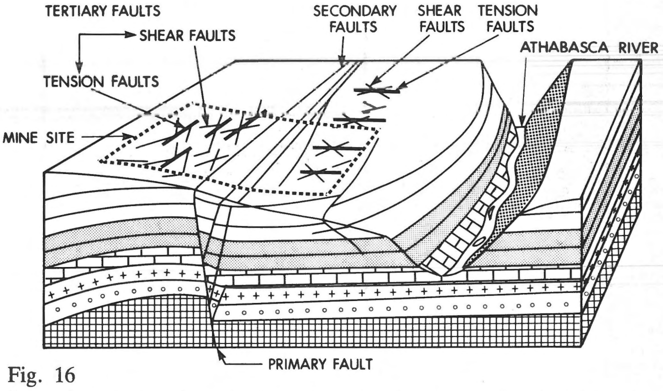

Fig. 16
Secondary faults, shear faults and tension faults associated with large primary fault in Precambrian basement (after de Sitter, 1956, p. 130).

ANOMALOUS WATER LEVELS AND OSMOTIC PRESSURES

Osmosis is the net transport of a solvent (water) through a membrane, permeable to solvent, toward a solution of a solute to which the membrane is impermeable. Osmotic pressure is the pressure that must be applied to the solution in excess of the pressure on the pure solvent to stop the process of osmosis and establish equilibrium. An equation, which applies to ideal membranes, expresses the osmotic potential ϕ_o as:

$$\phi_o = -dn/\varrho V\,RT \tag{25}$$

where R = universal gas constant = 0.08025 litres atm deg $^{-1}$. (g mole) $^{-1}$; T = temperature in °K; n = moles of solute (NaCl); V = litres of solvent (water); d = dissociation constant; ϱ = density of fluid.

A concentration of 200,000 mg/l of NaCl (d = 2) represents 3.42 mole per litre, therefore the osmotic suction – and not pressure, see the minus sign in eq. (25) – of a solution of density 1150 kg/m^3 amounts to:

$$\phi_o = -2\,(3.4188)\,(278°)\,(0.08205)/1(1.115) = -140 \text{ atmosphere}$$

In the Athabasca area, densely compacted clay layers occur occasionally on top of the karstified limestone or close to the base of the tar sands. They serve as imperfect membranes, partly permeable to water and to a lesser extent permeable to saline groundwaters and brines. Osmotic suction explains to some degree the anomalously low water pressures which have been recorded in many wells penetrating the karstified limestone and rock salt deposits underlying thc tar sands and even in boreholes under the Athabasca River (pers. comm. Hackbarth, 1978). Clay layers in the lower tar sands may, if they are present, reduce the flow of salt and brines into an open pit. Removal of the clay layers in a drained tar sand mine may cause buckling and heaving of the pit floor and an accelerated flow of brine and salt into an open pit. Large osmotic suctions, at the bottom of exploratory drill holes and in depressions of tar sand mine excavations, may lead to partial implosion and deformation of the clays or karstified limestone, followed by upward diffusion of salt or brine. The prevention of excavation of the imperfect clay membranes appears, therefore, significant for the stability of pit floors in tar sands excavations.

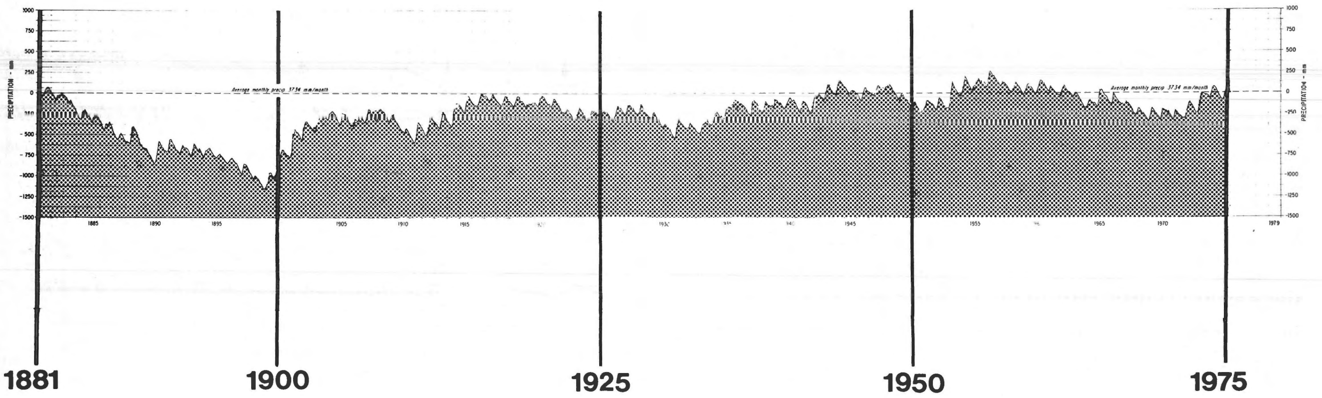

Fig. 17
Precipitation mass curve for Edmonton (1881-1975) showing 7-, 11-, 14-, 18- and 22-year hydrologic cycles.

MAN-MADE VS. NON-MAN-MADE ENVIRONMENTAL IMPACT

Whereas some hydrological and groundwater disturbances in the Athabasca tar sand area are presently caused by surface mining activity, other disturbances of significant amplitude are precipitated by 'natural' hydrological cycles. A good example of these natural cycles is shown in the long-term rainfall mass curve of Edmonton (Fig. 17) which dates back to 1881. A good example of long-term run-off cycles is shown in the mass curve of figure 18 for the North Saskatchewan River. Long-lasting effects of natural hydrologic cycles, which appear to occur randomly resulting in 7-, 11-, 14-, 18- and 22-year cycles are significant in north-central Alberta and, as it has been shown in the past, occasionally disastrous. The primary reason for this is that north central Alberta is located in an area with a precarious water balance, due to the low precipitation and high evapo-transpiration. Actually, mining operations should not be blamed for a sequence of natural events which would have occurred anyway. Natural hydrologic cycles influence the natural environment, as well as open-pit mining operations through increased or decreased groundwater discharge and runoff, high or low evaporation losses from reservoirs, high or low groundwater tables, high or low snowfall rates and high or low temperatures. Keeping track of natural hydrologic cycles via mass curves of hydrologic variables is helpful in forecasting geotechnical events since the hydrologic cycles appear to have a significant 'memory effect' in subsequent years.

CONCLUSIONS

Western Canadian mining experience shows that trenches and test pits excavated in the Athabasca tar sands fill up mainly with groundwater when this groundwater is not pumped out of the pits. Dry pits are required to facilitate presently accepted methods of tar sand excavation by bucket wheels and draglines. A tar sand upgrading plant which produces 16,000 m^3 of synthetic oil per day requires 80,000-100,000 m^3 of tar sand feed per day. This tar sand feed must be excavated from the open pit and transported to the upgrading plant. Dewatering of an excavation results in a redirection towards the open pit of most of the previously existing groundwater flow fields. This is accompanied by a lowering of the groundwater level around the pit and the creation of a large groundwater depression. Field data from different parts of the world show that a groundwater depression, characterized by the progres-

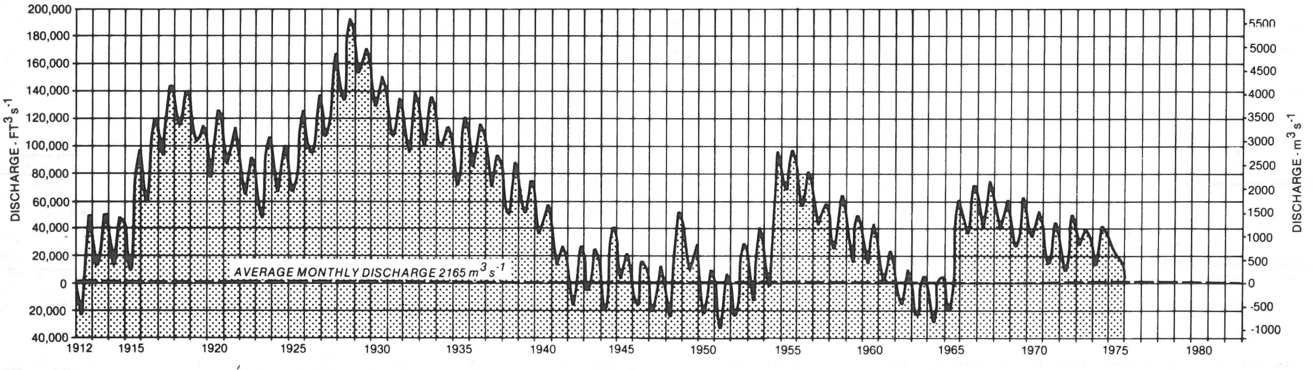

Fig. 18
Discharge mass curve for the North Saskatchewan River at Edmonton (1912-1975) showing random hydrologic cycles resulting in 7-, 11-, 14-, 18- and 22-year cycles.

sive lowering of groundwater levels, expands into all directions away from an open pit which is being dewatered. Typically, after ten years, a groundwater depression expands beyond an area of 150-1000 km^2 surrounding the mine.

The expansion of a cone of depression is restricted by water divides of main rivers at low elevations and by tailings and diversion reservoirs. Expansion of a groundwater depression around a mine in a valley location is not restricted in upstream directions along the valley or perpendicular to valley slopes. It is believed that dredging, hydraulic jetting and slurrying of tar sands may offer a feasible and economic alternative to dry excavation, thereby avoiding the expansion of a cone of depression.

The expansion of a cone of depression is related to the quantities and qualities of groundwater flowing into an Athabasca type open tar sand mine.

In particular, the amount of saline water and brines flowing into a typical open-pit mine depends on the permeabilities of overburden, tar sands, tar clays, and also on the transmissivities of the karstic limestone which separates the tar sands from underlying rock salt deposits. Mining methods, used to excavate the oil-rich basal 20 m of tar sands and also the presence or absence of water-tight clays, are controlling parameters for the salt water breakthrough into open tar sand mines.

Groundwater flow rates into tar sand mines may consist of 3,400-20,500 m^3 per day of fresh water, plus 13,500-96,000 m^3 per day of brackish-saline water plus 25-310,000 m^3 per day of salt water and brines. The ratio of total water flow into an open mine vs. oil production, depends on permeability conditions, but this ratio may range from 1-26 m^3 of water per m^3 of synthetic oil produced. The brackish-saline groundwater pumped out of an open tar sand mine may create disposal problems. It becomes difficult to dispose of mine water via injection into the sub-surface geological formations, at least at the projected rates. Disposal in rivers results in rapid downstream transport while only limited mixing occurs. Saline water disposal problems may arise in downstream lakes during the winter seasons when low natural river discharges prevail.

Groundwater dewatering and the expansion of a cone of depression have geotechnical implications. The upper part of the glacially overconsolidated Athabasca tar sands undergoes a relative increase in grain stresses and shearing resistance, balanced by a relative decrease in partial water, oil and gas pressures. Further groundwater drainage and overburden removal cause the escape of gas out of solution and the swelling of the upper tar sand surface. In the lower sections of the tar sands, increased partial water, oil and gas pressures may account for the swelling of clays and decreased geotechnical stability. Tar sand landslides are triggered by a matrix of factors and conditions related to sudden changes in the hydraulic potential of tar sands fluids and gases. A fundamental pre-Cambrian fault and its associated secondary and tertiary fault system is believed to be a significant factor in geotechnical stability. Osmotic suction may create the anomalously low water pressures which have been recorded in many wells penetrating the karstified Devonian limestone. Osmotic pull is caused by rock salt deposits underlying the tar sands.

ACKNOWLEDGEMENTS

Assistance of Gretchen Cook is acknowledged. The comments and constructive criticism of the reviewers are appreciated.

REFERENCES

Blank, R. 1979 Dewatering for open case mines in unconsolidated sediments by means of large tube wells and submersible pumps – Braunkohle, Spec. Issue E-1: E45-51.

Coward, J., S. Illum & R. Shah, 1978 Computer simulation of the basal aquifer at the Syncrude Mine – Proc. Nat. Hydrogeol. Conf. (Edmonton, Sept. 30 – Oct. 4) Alberta Research Council: 219-232.

De Sitter, L. U. 1956 Structural geology, 1st ed. – McGraw-Hill (New York): 552 pp.

De Vries, J. J. 1974 Groundwater flow systems and stream nets in The Netherlands – Ph. D. thesis Free Univ. Amsterdam and Rodopi N.V. (Amsterdam): 226 pp.

Edelman, J. H. 1972 Groundwater hydraulics of extensive aquifers – Bull. Int. Inst. Land Reclamation and Improvement Wageningen 13: 216 pp.

Ernst, L. F. 1962 Groundwater flow in the saturated zone and its calculation when horizontal parallel open conduits are present – Versl. Landb. Onderz. 67.15, PUDOC (Wageningen): 189 pp.

Hackbarth, D. A. 1977 Regional hydrogeology of the Athabasca oil sands area, Alberta, Canada. In: D. A. Redford & A. G. Winestock (eds.): The oil sands of Canada-Venezuela – Can. Inst. Min. Metall. Spec. Vol. 17: 87-103.

Horsfield, W. T. 1977 An experimental approach to basement-controlled faulting. In: R. T. C. Frost & A. J. Dikkers (eds.): Fault tectonics in N.W. Europe – Geol. Mijnbouw 56: 363-370.

Huizinga, T. K. 1969 Soil mechanics and its applications in excavation and construction, 4th ed. – Agon Elsevier (Amsterdam): 291 pp.

Inland Waters Directorate 1975 Water quality data, Alberta, 1961-1973 – Queen's Printer (Ottawa, Ont.) En-36-423/3.

Kirkham, D. 1967 Explanation of paradoxes in Dupuit-Forchheimer seepage theory – Water Resources Res. 2: 609-622.

Lerman, A. 1970 Chemical equilibria and evolution of chloride brines – Mineral. Soc. Amer. Spec. Pap. 3: 291-306.

Nanninga, N. 1960 Foundation engineering – Unpubl. lecture notes and construction drawings, Civil Eng. Dept. Delft Techn. Univ.: 100 pp.

Ozoray, G. 1977 Groundwater potential of the karst regions of Alberta, Canada – Proc. hydrologic problems in karst regions, Western Kentucky Univ.: 235-240.

Schneider, H. & S. Thiele 1965 Geohydrology of the Erft area – Min. Agric., Forestry Good Nordrhein-Westfalen: 185 pp.

Smith, G. D. 1965 Numerical solution of partial differential equations. Oxford Univ. Press (London): 179 pp.

Theis, C. V. 1965 Groundwater in southwestern region. In: Fluids in subsurface environments, A.A.P.G. symposium – The Collegiate Press, George Banta Co. Inc. (Menasha, Wisconsin): 327-341.

Vogwill, R. I. J. 1976 Some practical aspects of open-pit dewatering at Pine Point - Can. Mining Metall. Bull. April 1976: 76-88.